TOYOTA

Owner's Manual

For your safety and comfort,

read carefully and keep in the vehicle.

PRIUS

Not For Reproduction

Foreword

Welcome to the growing group of value–conscious people who drive Toyotas. We are proud of the advanced engineering and quality construction of each vehicle we build.

This Owner's Manual explains the operation of your new Toyota. Please read it thoroughly and have all the occupants follow the instructions carefully. Doing so will help you enjoy many years of safe and trouble–free motoring. For important information about this manual and your Toyota, read the following pages carefully.

When it comes to service, remember that your Toyota dealer knows your vehicle very well and is interested in your complete satisfaction. Your Toyota dealer will provide quality maintenance and any other assistance you may require.

Please leave this Owner's Manual in this vehicle at the time of resale. The next owner will need this information also.

All information and specifications in this manual are current at the time of printing. However, because of Toyota's policy of continual product improvement, we reserve the right to make changes at any time without notice.

Please note that this manual applies to all models and explains all equipment, including options. Therefore, you may find some explanations for equipment not installed on your vehicle.

Not For Reproduction

TOYOTA MOTOR CORPORATION

© 2009 TOYOTA MOTOR CORPORATION

All rights reserved. This material may not be reproduced or copied, in whole or in part, without the written permission of Toyota Motor Corporation.

Important information about this manual

Safety and vehicle damage warnings

Throughout this manual, you will see safety and vehicle damage warnings. You must follow these warnings carefully to avoid possible injury or damage.

The types of warnings, what they look like, and how they are used in this manual are explained as follows:

⚠ CAUTION

This is a warning against anything which may cause injury to people if the warning is ignored. You are informed about what you must or must not do in order to reduce the risk of injury to yourself and others.

NOTICE

This is a warning against anything which may cause damage to the vehicle or its equipment if the warning is ignored. You are informed about what you must or must not do in order to avoid or reduce the risk of damage to your vehicle and its equipment.

Safety symbol

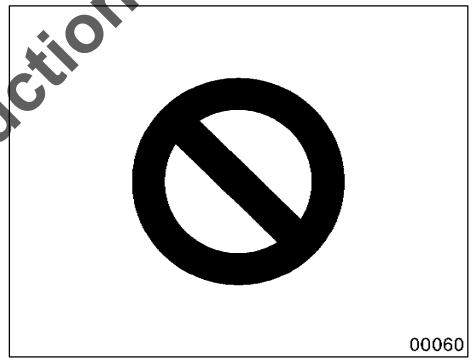

When you see the safety symbol shown above, it means: “Do not...”; “Do not do this”; or “Do not let this happen”.

Not For Reproduction

Important information about your Toyota

Occupant restraint systems

Toyota encourages you and your family to take the time to read Section 2–2 of this Owner's Manual carefully. In terms of helping you understand how you can receive the maximum benefit of the occupant restraint systems this vehicle provides, Section 2–2 of this Owner's Manual is the most important section for you and your family to read.

Section 2–2 describes the function and operation concerning seats, seat belts, SRS airbags and child restraint systems of this vehicle and some potential hazards you should be aware of. These systems work together along with the overall structure of this vehicle in order to provide occupant restraint in the event of a crash. The effect of each system is enhanced when it is used properly and together with other systems. No single occupant restraint system can, by itself, provide you or your family with the equal level of restraint which these systems can provide when used together. That is why it is important for you and your family to understand the purpose and proper use of each of these systems and how they relate to each other.

The purpose of all occupant restraint systems is to help reduce the possibility of death or serious injury in the event of a collision. None of these systems, either individually or together, can ensure that there is no injury in the event of collision. However, the more you know about these systems and how to use them properly, the greater your chances become of surviving an accident without death or serious injury.

Seat belts provide the primary restraint to all occupants of the vehicle, and every occupant of the vehicle should wear seat belts properly at all times. Children should always be secured in child restraint systems that are appropriate for their age and size. SRS (Supplemental Restraint System) airbags are, as their names imply, designed to work with, and be supplemental to, seat belts and are not substitutes for them. SRS airbags can be very effective in reducing the risk of head and chest injuries by preventing contact of the head and chest with interior portions of the vehicle.

Not For Reproduction

In order to be effective, the SRS airbags must deploy with tremendous speed. The rapid deployment of the SRS airbags makes the SRS airbags themselves potential sources of serious injury if an occupant is too close to an airbag, or if an object or some part of his or her body has been placed between the occupant and the airbag at the time of deployment. This is just one example of how the instructions in Section 2–2 of this Owner's Manual will help ensure proper use of the occupant restraint systems, and increase the safety they can provide to you and your family in the event of an accident.

Toyota recommends you to read the provisions in Section 2–2 carefully and refer to them as needed during your time of ownership of this vehicle.

Accessories, spare parts and modification of your Toyota

A wide variety of non–genuine spare parts and accessories for Toyota vehicles are currently available in the market. You should know that Toyota does not warrant these products and is not responsible for their performance, repair, or replacement, or for any damage they may cause to, or adverse effect they may have on, your Toyota vehicle.

This vehicle should not be modified with non–genuine Toyota products. Modification with non–genuine Toyota products could affect its performance, safety or durability, and may even violate governmental regulations. In addition, damage or performance problems resulting from the modification may not be covered under warranty.

Not For Reproduction

Installation of a mobile two–way radio system

As the installation of a mobile two–way radio system in your vehicle could affect electronic systems such as multiport fuel injection system / sequential multiport fuel injection system, cruise control system, anti–lock brake system, vehicle stability control system, SRS airbag system, seat belt pretensioner system and Toyota hybrid system, be sure to check with your Toyota dealer for precautionary measures or special instructions regarding installation.

Smart entry and start system

Users of any electrical medical devices such as implanted pacemakers should consult the manufacturer of the device for information about its operation under the influence of radio waves. Radio waves could have unexpected effects on the operation of such medical devices. For details, see “Keys” on page 18 and “Smart entry and start system” on page 22.

Maintenance schedule

Please refer to the separate “Warranty and Service Booklet”.

Not For Reproduction

Scrapping of your Toyota

The SRS airbag and seat belt pretensioner devices in your Toyota contain explosive chemicals. If the vehicle is scrapped with the airbags and pretensioners left as they are, this may cause an accident such as fire. Be sure to have the systems of the SRS airbag and seat belt pretensioner removed and disposed of by the qualified service shop or by your Toyota dealer before you dispose of your vehicle.

⚠CAUTION

When your vehicle or battery needs to be disposed of, be sure to consult your Toyota dealer. Hybrid batteries must be collected through Toyota dealers. If your vehicle is disposed of without dismantling, someone could receive an electric shock by touching the high voltage parts of the hybrid battery. If the battery is not disposed of properly, its contents can cause death or serious injury.

Hybrid battery

The hybrid battery has a limited service life. Call your Toyota dealer for information about recycling or disposal of hybrid battery and your vehicle.

Not For Reproduction

CAUTION

Precautions for use of hybrid vehicle

The vehicle has both high voltage DC and AC systems as well as a 12–volt system. DC and AC high voltage are both very dangerous and can cause death or serious injury, severe burns and electric shock.

- **In order to avoid personal injuries, do not touch the high voltage cables (orange colored) and their connectors.**
- **Follow the caution labels attached to the high voltage parts.**
- **Do not remove or replace the high voltage parts such as the inverter unit (located in the engine compartment), hybrid battery (located behind rear seat), etc.**
- **Do not touch the service plug located in the left side trim of the luggage compartment without hybrid system technical training. (See "Precautions for use" on page 13.) This component is provided to disable the high voltage system in case of servicing at a Toyota dealer.**

CAUTION

If an accident occurs

- **Pull your vehicle off the road, push the "P" position switch, stop the hybrid system and if the key is inserted into key slot, remove it.**
- **In order to avoid personal injuries, do not touch any high voltage wirings and their connectors, and high voltage parts (inverter unit, hybrid battery, etc.).**
- **If some exposed electric wires are protruding inside or outside of your vehicle, an electric shock may occur. Never touch the electric wires.**
- **If fluid leaks or gets in some parts of the vehicle, never touch it because it may be electrolyte (strong alkali) from the hybrid battery. If it gets into your skin or eyes, wash off immediately with a large amount of water, if possible, boric acid solution, and get immediate medical attention in order to help avoid serious injury.**
- **If a vehicle fire occurs, extinguish it using a fire extinguisher for the exclusive use on electric fires. Or, use a large amount of water to prevent flammable gas from being generated from the batteries.**

Not For Reproduction

- **If your Toyota needs to be towed, do it with the front wheels raised. For details on towing, see "If your vehicle needs to be towed" on page 248.**

⚠ CAUTION

High Voltage

Your vehicle is equipped with cables connected to parts of the vehicle subject to high voltage (about 500 V at maximum). There are some other parts that reach high temperatures while you drive. Never touch battery cables (wrapped in orange–colored harnesses) or their connectors since they are under high voltage and dangerous. Caution labels are applied to these parts to identify them. Carefully observe the instructions on these caution labels.

Not For Reproduction

Table of contents

		Page
1	**FEATURES ON NEW TOYOTA VEHICLE**	
	1 Overview of instruments and controls	1
	2 Toyota hybrid system	7
2	**OPERATION OF INSTRUMENTS AND CONTROLS**	
	1 Keys and Doors	17
	2 Occupant restraint systems	45
	3 Steering wheel and Mirrors	89
	4 Lights, Wipers and Defogger	95
	5 Gauges, Meters and Service reminder indicators	103
	6 “POWER” switch, Transmission and Parking brake	119
	7 Multi–information display	135
	8 Audio system	149
	9 Air conditioning system	183
	10 Other equipment	199
3	**INFORMATION BEFORE DRIVING YOUR TOYOTA**	211
4	**STARTING AND DRIVING**	225
5	**IN CASE OF AN EMERGENCY**	235
6	**CORROSION PREVENTION AND APPEARANCE CARE**	253
7	**MAINTENANCE REQUIREMENTS**	261
8	**DO–IT–YOURSELF MAINTENANCE**	
	1 Introduction	265
	2 Engine and Chassis	271
	3 Electrical components	283
9	**SPECIFICATIONS**	295
10	**INDEX**	303

Not For Reproduction

Not For Reproduction

SECTION 1 – 1

FEATURES ON NEW TOYOTA VEHICLE

Overview of instruments and controls

Instrument panel overview 2
Instrument cluster and multi–information display overview 4
Indicator symbols on the instrument cluster
and multi–information display 5

Not For Reproduction

Instrument panel overview

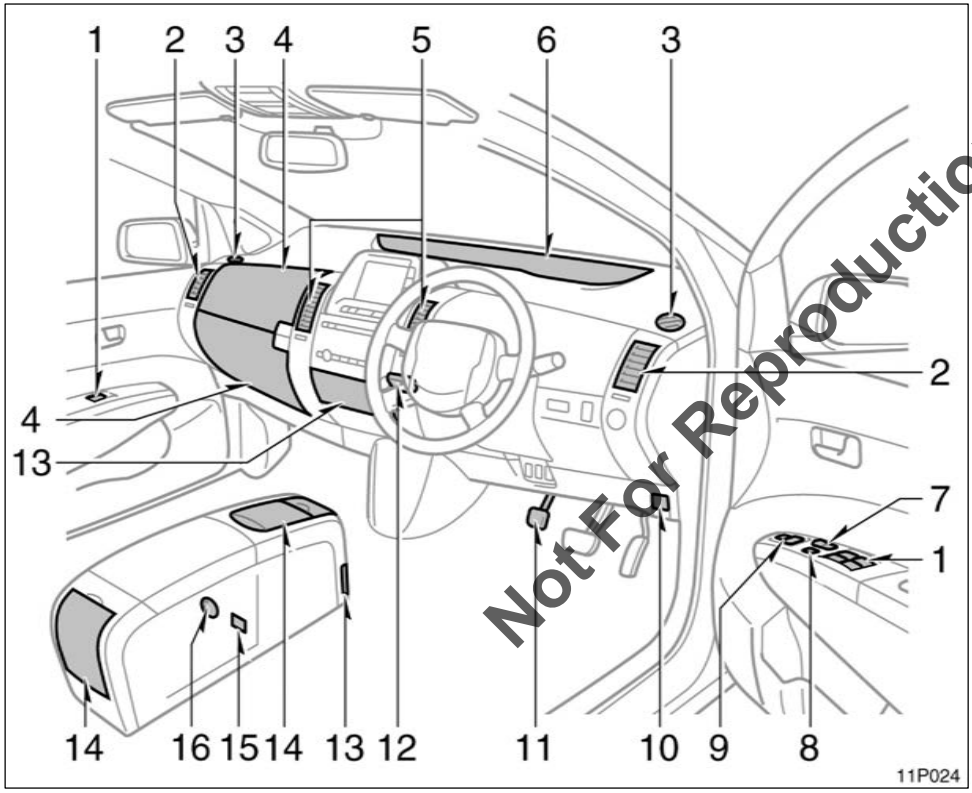

Not For Reproduction

1. Power window switches 38
2. Side vent 194
3. Side defroster outlet
4. Glove box 205
5. Center vents 194
6. Instrument cluster 4
7. Power door lock switch 36
8. Window lock switch 39
9. Power rear view mirror control switches 91
10. Hood lock release lever 40
11. Parking brake pedal 132
12. Tilt steering lock release lever 90
13. Auxiliary box 205
14. Cup holders 206
15. AUX adapter 204
16. Power outlet 203

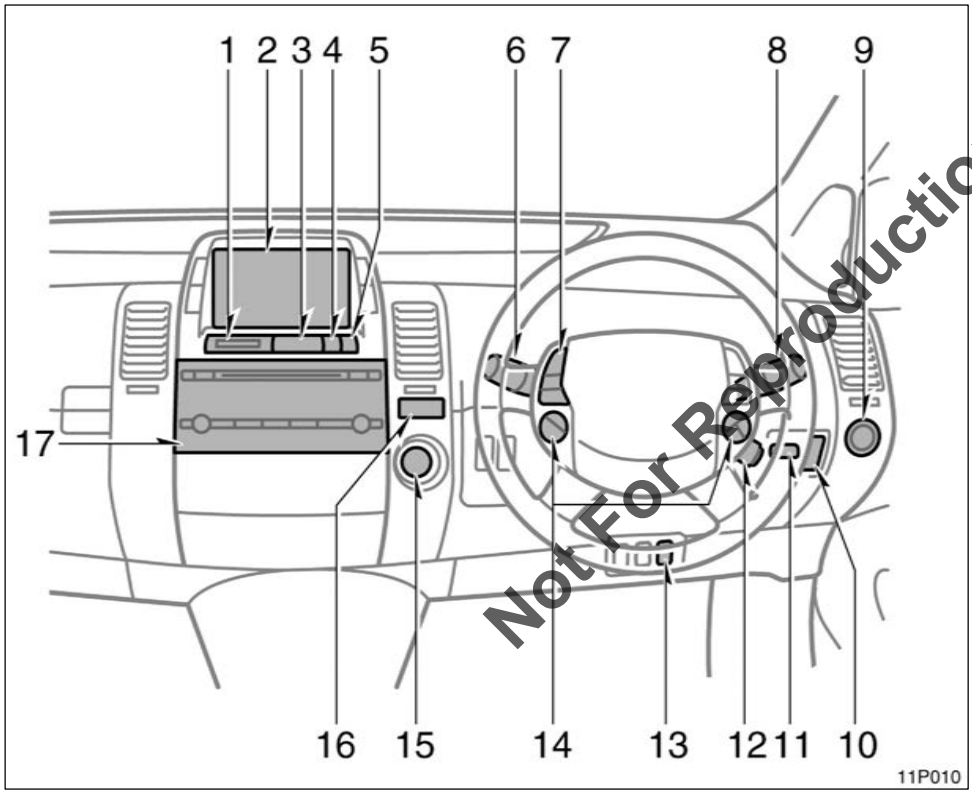

Not For Reproduction

1. Clock 200
2. Multi–information display or navigation system including multi–information display (For the navigation system, see the separate “Navigation System Owner’s Manual”.) 136
3. Emergency flasher switch 97
4. Trip meter reset button 105
5. Instrument panel light control button 106
6. Wiper and washer switches 100
7. Audio remote control switches . . . 174
8. Headlight and turn signal switches 96
9. “POWER” switch 121
10. “EV” drive mode switch 8
11. Key slot 120
12. Cruise control switch 132
13. Smart entry and start system cancel switch 31
14. Climate remote control switches 194
15. Shift lever (R, N, D, B) 126
16. “P” position switch 126
17. Audio system 150

Instrument cluster and multi-information display overview

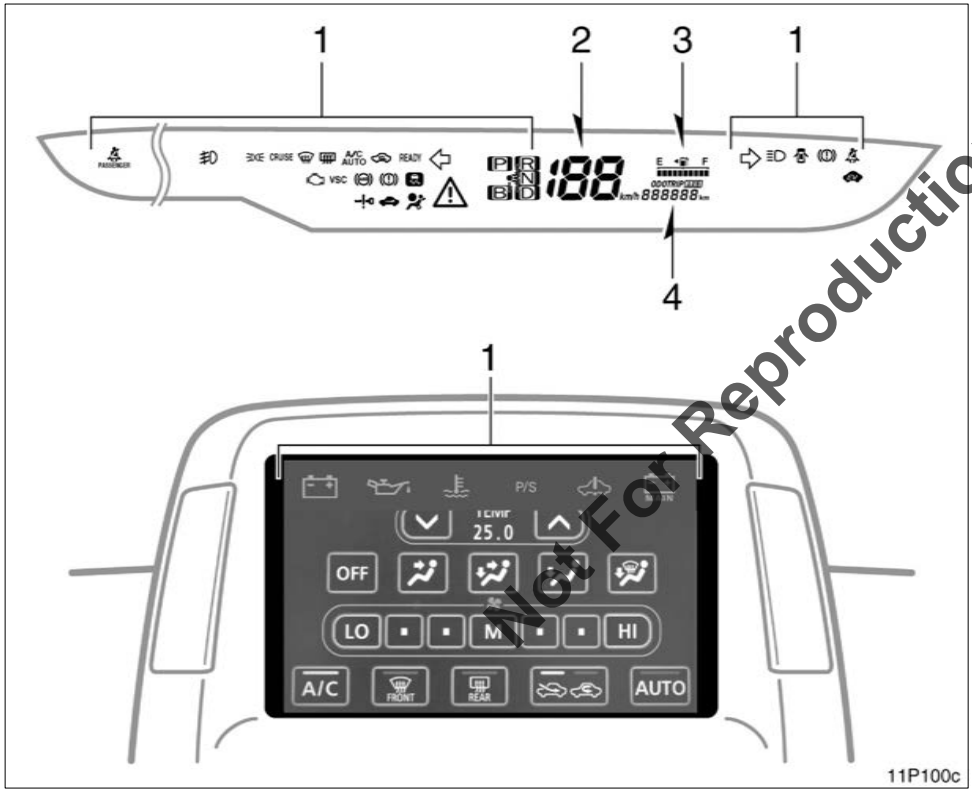

Not For Reproduction

1. Service reminder indicators and indicator lights 107, 114
2. Speedometer
3. Fuel gauge 104
4. Odometer and trip meter 105

Indicator symbols on the instrument cluster and multi–information display

	Brake system warning lights*1
	Driver's seat belt reminder light*1
PASSENGER	Front passenger's seat belt reminder light*1
E F	Low fuel level indicator light*1
	Malfunction indicator lamp*1
	Master warning light*1
ABS	Anti–lock brake system warning light*1
	Open door warning light*1
	SRS warning light*1
VSC	Vehicle stability control system warning light*1

	Charging system warning light*2
	High coolant temperature warning light*2
	Low engine oil pressure warning light*2
MAIN	Hybrid battery warning light*2
P/S or PS	Electric power steering system warning light*2
	Hybrid system warning light*2
CRUISE	Cruise control indicator light*3
P R N B D	Running mode position indicator light*4
	Smart entry and start system warning light*5
	Turn signal indicator lights

Not For Reproduction

	Headlight high beam indicator light
	Tail light indicator light
	Front fog light indicator light
READY	Driving ready light
A/C AUTO	Automatic air conditioner indicator light
	Recirculate mode indicator light
	Windshield air flow indicator light
	Rear window defogger indicator light
	Hybrid vehicle immobilizer / Theft deterrent system indicator light

EV	EV drive mode indicator light
	Slip indicator light

*1: For details, see “Service reminder indicators and warning buzzers— —Instrument cluster” on page 107.

*2: For details, see “Service reminder indicators and warning buzzers— —Multi–information display” on page 114.

*3: If this light flashes, see “Cruise control” on page 132.

*4: For details, see “Hybrid transaxle” on page 126.

*5: For details, see “Smart entry and start system” on page 22.

Not For Reproduction

SECTION 1 – 2

FEATURES ON NEW TOYOTA VEHICLE

Toyota hybrid system

Toyota hybrid system 8
Toyota hybrid system operating condition 9
Starting your vehicle 12
For efficient use of your vehicle 12
Precautions for use 13

Not For Reproduction

Toyota hybrid system—

Toyota hybrid system combines a gasoline engine and electric motor power to improve the fuel economy and minimize the emissions as well as to provide better power performance than the ordinary gasoline–powered vehicles.

Depending on the driving condition, the vehicle runs on the best combination of;

- **Gasoline engine power**
- **Electric motor power generated by the gasoline engine**
- **Electric motor power of the hybrid battery**

Furthermore, the energy is efficiently used in the following ways:

- When stopping the vehicle, the gasoline engine is automatically stopped.
- When applying the brakes or decelerating, electricity is converted from the turning force of the wheels and stored in the hybrid battery. (This is called regenerative brake.)

Since the battery is charged by the gasoline engine as needed, it does not require charging from an outside source like an electric vehicle.

—"EV" drive mode switch

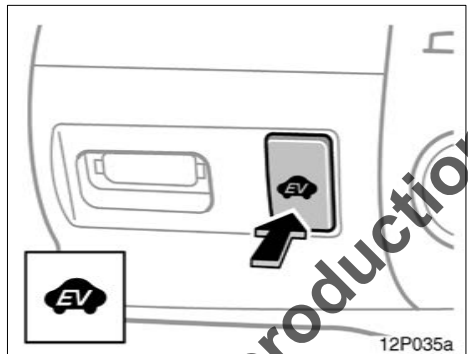

In the "EV" drive mode, your vehicle runs like an electric vehicle, only using the electric motor driven via electricity which is stored in the hybrid battery. This mode is suitable for driving in residential areas in the early morning or in the middle of the night or in the covered parking lot because you do not have to worry about noise or exhaust gases.

Press the switch to turn on the electric motor power manually.

The indicator light in the instrument cluster comes on. Pressing the switch again will turn off this function and the indicator light.

⚠ CAUTION

The driver should pay full attention around the vehicle especially when it is driven only by the electric motor (with the gasoline engine stopped). People in the immediate area might misjudge the hybrid vehicle movement based on the absence of the regular engine noise.

In the following conditions, the "EV" drive mode may not be turned on. In this case, the message appears in the multi–information display and a beep sounds.

- The hybrid system gets hot. (After the vehicle is left in hot weather, after driving on the slopes or high speed driving, etc.)
- The hybrid system gets cold. (After the vehicle has long been left below 0°C (32°F).)
- During gasoline engine warm up
- The hybrid battery assembly charging level is 3 or lower. (You can check the hybrid battery charge level on the "Energy monitor" screen.)
- The vehicle speed is about 55 km/h (34 mph) or over.

Not For Reproduction

- The accelerator pedal is depressed strongly or on the slopes.
- The defroster is in use.

Turning on when the engine is cold

When the engine is cold (for example early morning), it will start warming up about 10 seconds after the “READY” light comes on. Durning the warming up, the EV drive mode cannot be turned on. (The time before the engine starting varies depending on the temperature, air conditioning condition, etc.) To use the EV drive mode, press the switch before the engine starts.

In the following conditions, the “EV” drive mode may be automatically cancelled while driving. In this case, a beep sounds and the “EV” drive mode indicator light flashes three times and then goes out.

- The hybrid battery assembly charging level is 2 or lower. (You can check the hybrid battery charge level on the “Energy monitor” screen.)
- The vehicle speed exceeds about 55 km/h (34 mph).
- The accelerator pedal is depressed strongly or on the slopes.

Although the available driving range differs depending on factors such as the hybrid battery charging level or air conditioning condition, it usually ranges from about several hundred meters to 2 km (about 1.2 mile or less) when the vehicle speed is less than about 55 km/h (34 mph).

As your vehicle is designed to have the best fuel economy during normal driving (driving in the combination of gasoline engine and electric motor power), frequent use of the “EV” drive mode may worsen fuel economy.

Not For Reproduction

Toyota hybrid system operating condition

Basic operations are described below. Besides, Toyota hybrid system performs various controls depending on the operating condition: The “Energy monitor” screen tells you which power is used currently.

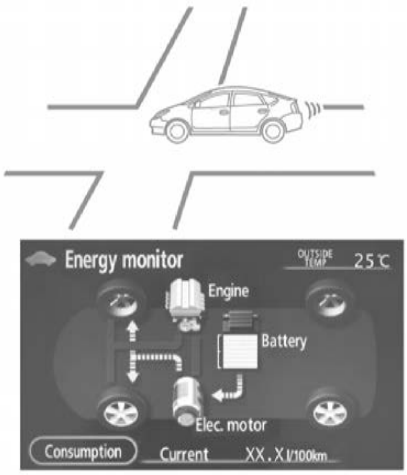

Electric power in use

12P072

When starting or backing up, etc., the vehicle runs on electric power from hybrid battery, because the gasoline engine efficiency is low.

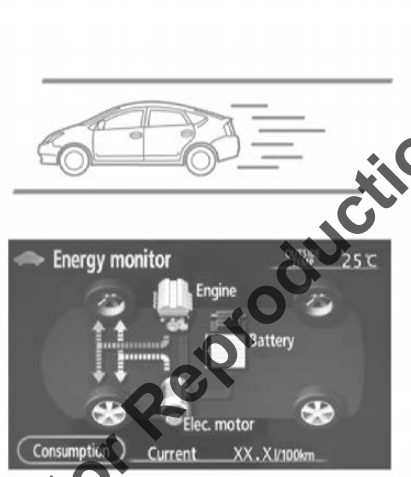

Gasoline power in use

12P073

During normal driving, the vehicle runs mainly on gasoline power. However, the electric motor, using electric power generated by the gasoline engine, can supplement the gasoline engine power.

The vehicle controls the optimum ratio of the gasoline and electric power to help use energy more efficiently.

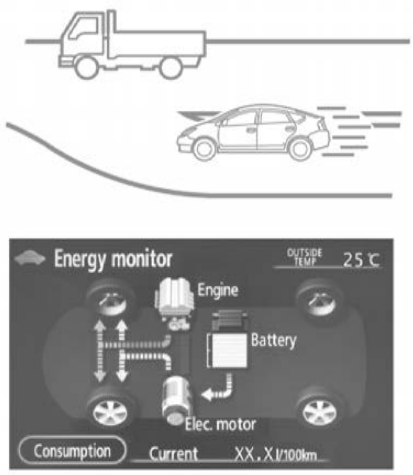

Electric and gasoline power in use

12P074

When driving at full throttle, additional electric power is applied from the hybrid battery. Vehicle performance improves.

Not For Reproduction

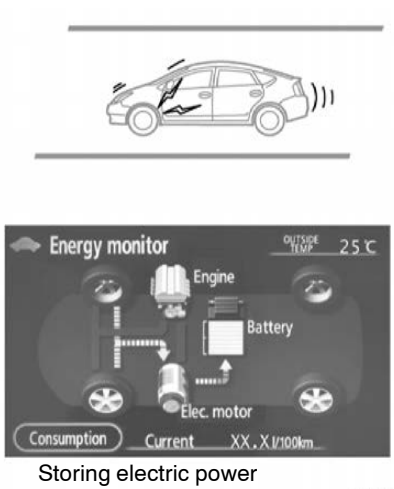

Storing electric power

12P075

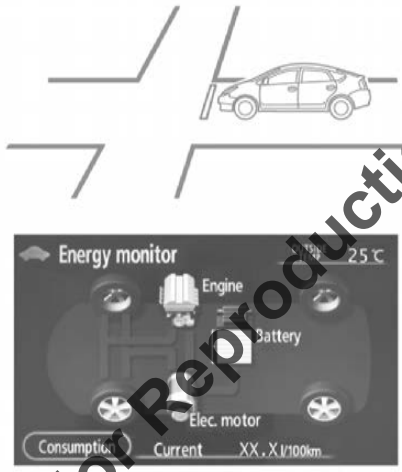

Not in use

12P076

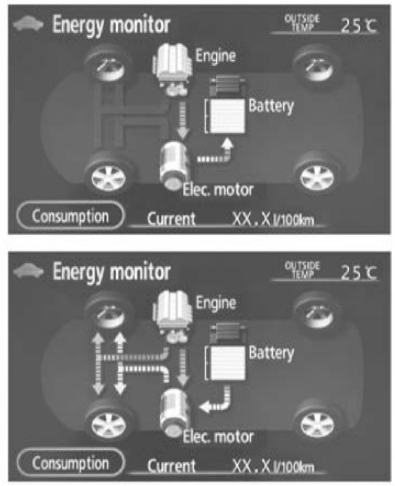

12P077

When decreasing speed or applying the brakes, the turning force of the wheels makes the electric motor operate as a generator and additional electricity is stored in the hybrid battery (regenerative brake).

When stopping, the gasoline engine automatically shuts off.

Charging hybrid battery

When the hybrid battery power is insufficient, the gasoline engine charges the hybrid battery. The system always supplies electricity at a constant level.

Not For Reproduction

Starting your vehicle

Your vehicle is equipped with push button start system. The hybrid system will start automatically by pressing the "POWER" switch briefly with the brake pedal depressed.

With smart function

1. Carry the key with you.
2. Press the "POWER" switch briefly with the brake pedal depressed.

Without smart function

1. Insert the key.
2. Press the "POWER" switch briefly with the brake pedal depressed.

The "READY" light flashes and stays on. Two beeps sound after a few seconds, and the hybrid system will start. (If the ambient temperature is low such as during winter, it may take time until the "READY" light comes on.) You cannot start your vehicle when the brake pedal is not depressed. (For details, see "How to start the hybrid system—" on page 226.)

The engine may not start even with the "READY" light on.

For efficient use of your vehicle

Drive your vehicle with a smooth acceleration and deceleration.

- While driving, energy is recovered through the regenerative brake as the vehicle decelerates. However, for more efficient use, do not accelerate or decelerate your vehicle more than necessary.
- Avoid abrupt acceleration and deceleration.
- The remaining capacity of the hybrid battery can be confirmed on the energy monitor screen of the multi–information display. See "Information" on page 141 for details. Gradual or non–abrupt acceleration or deceleration will more effectively use the benefits of an electric motor without having to use gasoline engine power.

When parking, be sure to put the hybrid transaxle in "P". While driving, use the hybrid transaxle in "D".

- In "N", the gasoline engine operates but electricity cannot be generated. The battery will be discharged requiring unnecessary engine power to recharge.
- The hybrid system automatically recharges the hybrid battery when the remaining battery power is reduced. However, the charging is not available if the hybrid transaxle is "N".

INFORMATION

The gasoline engine starts and stops automatically. (It stops during a low load driving, deceleration or when the vehicle is stopped.)

If the "READY" light remains on, you can start your vehicle using the electric motor even with the gasoline engine stopped.

The gasoline engine may not stop automatically in the following conditions:

- ***During gasoline engine warm–up***
- ***During hybrid battery charging***
- ***During low or high hybrid battery temperature***

Not For Reproduction

Precautions for use

The vehicle runs in combination with the gasoline and electric power. Pay special attention to the following items.

Be careful of high voltage and high temperature.

Your vehicle is equipped with the orange colored cables connected to the hybrid battery (about 200 V) and to other components that are all high voltage.

⚠ CAUTION

Do not touch or come in contact with orange cables or battery terminals. Electric shock may cause serious injury or death. Read all caution labels.

An electric motor, coolant radiator and some other parts reach high temperature while driving. Caution labels are applied to these parts. Carefully observe the instructions on these caution labels.

⚠ CAUTION

Never remove or disassemble any high voltage part, high voltage cables (orange color) and their connectors. It may cause death or serious injury.

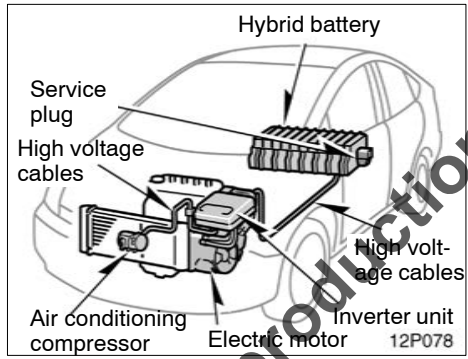

Do not touch the service plug.

The service plug is installed in the left side trim of the luggage compartment. It is provided to disable high voltage current from the hybrid battery when the vehicle is in need of repairs at your Toyota dealer.

⚠ CAUTION

- **The shaded parts in the illustration are subjected to high voltage.**
- **Inappropriate handling may cause an electric shock resulting in serious injury or death. Never touch any item in shaded area.**

These high voltage parts or cables consisting of an electromagnetic shielding structure produce relatively the same amount of electromagnetic waves as conventional gasoline–fueled vehicles or home electric appliances.

As unwanted noise may occur in the reception of mobile radios, contact your Toyota dealer for installation or removal.

Always keep your hybrid vehicle's driving characteristics in mind.

⚠ CAUTION

The driver should pay full attention around the vehicle especially when it is driven only by the electric motor (with the gasoline engine stopped). People in the immediate area might misjudge the hybrid vehicle movement based on the absence of the regular engine noise.

Not For Reproduction

- As the vehicle runs with both the gasoline engine and electric motor, you may hear a motor sound coming from the engine compartment.
- When the hybrid system is started or stopped, you may hear a sound coming from the hybrid battery in the luggage compartment. However, this does not indicate any trouble.
- If the “READY” light is on, you can start even though the gasoline engine may be off.
- When you shift the shift lever to “B” and release it to its original position and your foot from the accelerator pedal, engine braking will be applied. However, during high speed driving you may feel that deceleration by engine braking is less than that of ordinary vehicle.

Be sure to put the hybrid transaxle in “P” when parking.

In “N”, the hybrid battery assembly is not charged, even if the gasoline engine is operating. You cannot run your vehicle if the hybrid transaxle is left in “N” for a long time because the hybrid battery assembly will be discharged.

When you leave your vehicle, put the hybrid transaxle in “P” and set the parking brake. Be sure to carry the key with you and lock all the doors.

If you leave the hybrid system in “ACC” or “IG–ON”, the hybrid system may not start because the 12 volt battery will be discharged.

If the vehicle is parked for a long time, the hybrid battery will discharge gradually. To keep the hybrid battery in good condition, drive the vehicle at least once every several months for at least 30 minutes or ten miles. If the hybrid battery becomes fully discharged and the vehicle will not start even with a jump–start to the 12 volt battery, contact your Toyota dealer.

Not For Reproduction

⚠ CAUTION

- **When you leave your vehicle, be sure to shut off the hybrid system.**
- **Be sure to put the hybrid transaxle in “P” because the vehicle can start with the “READY” light on and the engine stopped (no engine sound and vibration). When the “READY” light is on, if you leave your vehicle in shift position other than “P” and “N”, the vehicle will creep and start abruptly with the accelerator pedal being depressed by mistake. This may cause death or serious injury.**

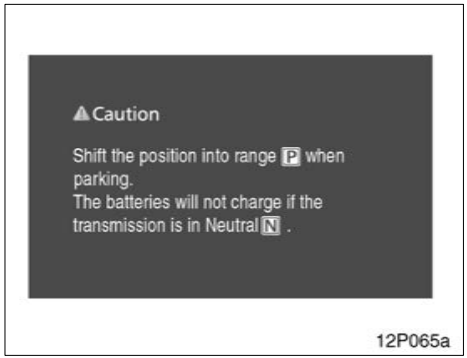

Type 1

Type 2

When the multi–information display shows this message, the master warning light (⚠) comes on in the instrument cluster. Read the message and follow the instruction.

- When you leave your vehicle, or stop or park for a while, put the hybrid transaxle in “P”.
- Charging is necessary. In “N”, charging will not be applied. The electric generator operates in “P”, “D” or “B”. If you continue driving, put the hybrid transaxle in “D” or “B” and depress the accelerator pedal. Do not leave the hybrid transaxle in “N”. When driving in traffic jam, operate in “D”.

Not For Reproduction

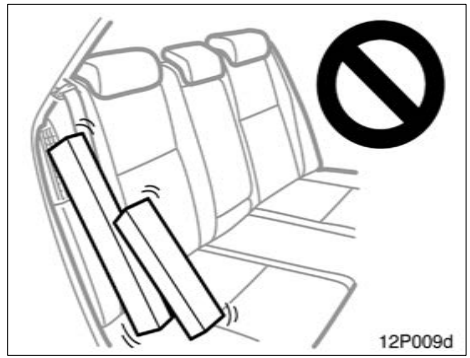

Do not allow anyone to lean against the side of the rear right seatback, nor put any luggage or other obstructions on it.

- An air vent is provided on the side of the rear right seatback to cool the hybrid battery. If this vent is covered, the hybrid battery will overheat resulting in a reduction of the output performance of the hybrid system.
- The seat belt not properly set in the guide on the top of the rear seat may block the air vent. Be sure to pass the seat belt through the guide properly.

- Do not wet or put foreign objects over the air vent. Otherwise, the hybrid battery may be adversely affected and be damaged.
- You may hear a cooling fan noise from the air vent.
- If water is used to wash the inside of the vehicle or inside the luggage compartment, or a large volume of water is spilled in these areas, the hybrid battery may be damaged, or a short circuit may occur.

For vehicle repairs or maintenance, be sure to consult your Toyota dealer.

If your vehicle is beyond repair because of accident or something, be sure to consult your Toyota dealer.

As sealed Nickel–Metal hydride batteries are used, be sure to consult your Toyota dealer when disposing of your vehicle.

⚠ CAUTION

If you are involved in an accident, follow these precautions.

- **Move the vehicle to a safe place and perform the followings to reduce the risk of high voltage electricity leakage.**
  - **Depress the brake pedal and apply the parking brake.**
  - **Press the "P" position switch and stop the hybrid system.**
  - **If the key is inserted into key slot, remove it.**
- **If your vehicle has experienced major damage, you may get an electric shock. To prevent this, never touch the high voltage parts (hybrid battery assembly, etc.) or cables (orange color) connecting these parts. If some exposed electric wires are protruding inside or outside of the vehicle, an electric shock may also occur. Never touch them.**
- **If the fluid leaks or gets in some part of the vehicle, never touch it because it may be electrolyte (strong alkali) from the hybrid battery. If it gets on your skin or eyes, wash off immediately with a large amount of water, if possible, with boric acid solution, and get immediate medical attention in order to help avoid serious injury.**
- **If a vehicle fire occurs, extinguish it using a fire extinguisher for the exclusive use on electric fires. As a small amount of water may be dangerous, use a large amount of water, for example from a fire hydrant, or wait for a fire–fighting team arrival.**
- **If your vehicle needs to be towed, do it with the front wheels or all four wheels raised. If the front wheels are on the ground when towing, the electric motor may continue to generate electricity which could leak electricity. A fire could occur depending on the degree of damage. See "If your vehicle needs to be towed" on page 248.**

Not For Reproduction

OPERATION OF INSTRUMENTS AND CONTROLS

Keys and Doors

Keys 18
Hybrid vehicle immobilizer system 20
Smart entry and start system 22
Wireless remote control 32
Side doors 35
Back door 37
Power windows 38
Hood 40
Fuel tank cap 42

Not For Reproduction

Keys

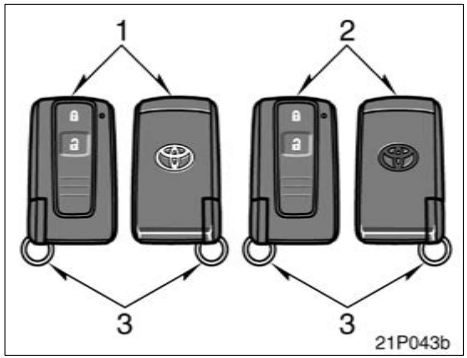

1. Master keys with silver ornament (Vehicles equipped with smart entry and start system)—These keys work in every lock. Your Toyota dealer will need one of them to make a new key with a built–in transponder chip. Before you use these keys, be sure to read “Smart entry and start system” on page 22.
2. Master keys without silver ornament (Vehicles not equipped with smart entry and start system)—These keys work in every lock. Your Toyota dealer will need one of them to make a new key with a built–in transponder chip.
3. Mechanical keys (attached to the master key)—These key work for the driver’s door only.

When bringing an electronic key onto an aircraft, make sure you do not press any buttons on the electronic key while inside the aircraft cabin. If you are carrying an electronic key in your bag etc., ensure that the buttons are not likely to be pressed accidentally. Pressing a button may cause the electronic key to emit radio waves that could interfere with the operation of the aircraft.

Not For Reproduction

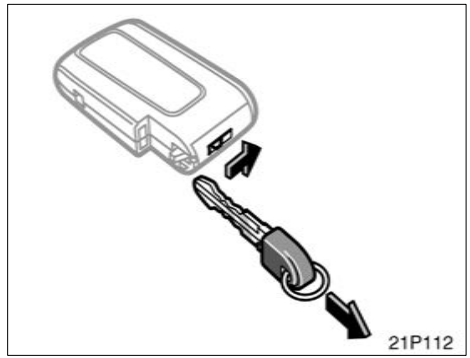

USING A MECHANICAL KEY

When you use the mechanical key included on the side of the key, slide the lock knob in the arrow direction and take out the key as shown. To put the key back, slide the lock knob in the arrow direction and replace the key. Be sure to put the key back when not in use.

Since the doors can be locked without a key, you should always carry a spare master key in case you accidentally lock your keys inside the vehicle.

⚠ CAUTION

- **People with implanted pacemakers or cardiac defibrillators should keep away from the smart entry and start system antennas. For the antenna locations, see "ANTENNA LOCATION" on page 24. The radio waves may affect the operation of such devices. If necessary, the entry function can be disabled. Ask your Toyota dealer for details, such as the frequency of radio waves and timing of emitting the radio waves. Then, consult your doctor to see if you should disable the entry function.**
- **Users of any electrical medical device other than implanted pacemakers and implanted cardiac defibrillators should consult the manufacturer of the device for information about its operation under the influence of radio waves. Radio waves could have unexpected effects on the operation of such medical devices.**

For details for disabling the entry function, see "DEACTIVATING THE SMART FUNCTION" on page 31.

NOTICE

When using a key containing a transponder chip, observe the following precautions:

- ***Do not affix any material that cuts off electromagnetic waves (such as a metal seal) on the key.***
- ***Do not knock the key hard against other objects.***
- ***Do not leave the key exposed to high temperatures for a long period, such as on the dashboard or hood under direct sunlight.***
- ***Do not put the key in water or wash it in an ultrasonic washer.***
- ***Do not keep the key together with the products emitting electromagnetic waves such as a cellular phone.***

Not For Reproduction

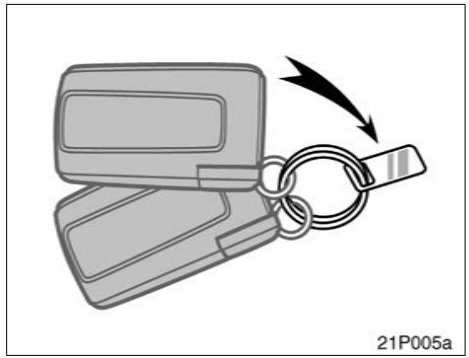

KEY NUMBER PLATE

Your key number is shown on the plate. Keep the plate in a safe place such as your wallet, not in the vehicle.

If you should lose your keys or if you need additional keys, duplicates can be made by your Toyota dealer using the key number.

We recommend writing down the key number and storing it in a safe place.

Hybrid vehicle immobilizer system

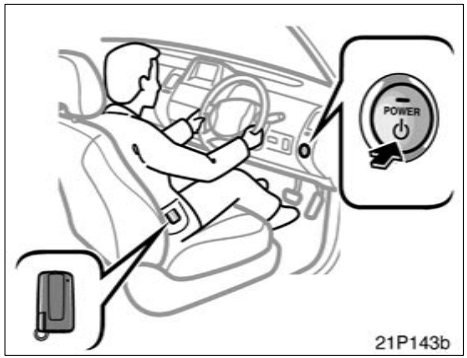

DEACTIVATION USING THE SMART FUNCTION

The hybrid vehicle immobilizer system is a theft prevention system. When you enter the vehicle carrying a smart key and press the "POWER" switch, the electronic code in the key is automatically checked to determine whether it corresponds to the registered ID code for the vehicle. If the ID code is verified, you can start the hybrid system.

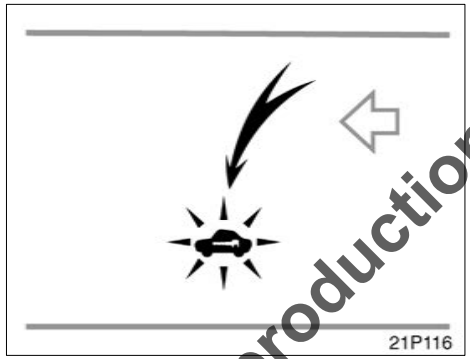

The system is automatically set when the hybrid system is off and driver's door is opened. The indicator light will start flashing to show the system is set.

If any of the following indicator conditions occurs, contact your Toyota dealer.

- The indicator light stays on.
- The indicator light does not start flashing when the hybrid system is off and driver's door is opened.
- The indicator light flashes inconsistently.

Carrying a smart key and pressing the "POWER" switch automatically cancels the system, which enables the hybrid system to start. The indicator light will go off.

For your Toyota dealer to make you a new key with built–in transponder chip, your dealer will need your key number and master key. However, there is a limit to the number of additional keys your Toyota dealer can make for you.

NOTICE
Do not modify, remove or disassemble the hybrid vehicle immobilizer system. If any unauthorized changes or modifications are made, proper operation of the system cannot be guaranteed.

Not For Reproduction

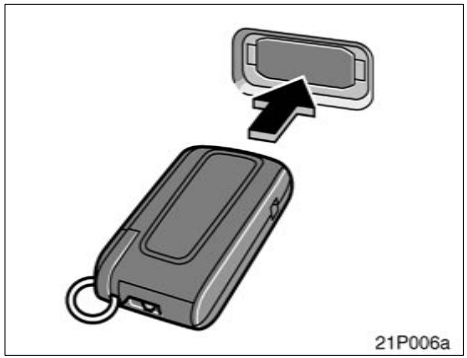

DEACTIVATION USING THE KEY

The hybrid vehicle immobilizer system is a theft prevention system. When you insert the key in the key slot, the transponder chip in the key transmits an electronic code to the vehicle. The hybrid system will start only when the electronic code in the chip corresponds to the registered ID code for the vehicle.

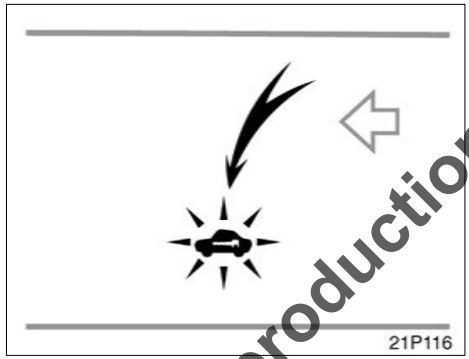

The system is automatically set when the key is removed from the key slot. The indicator light will start flashing to show the system is set.

If any of the following indicator conditions occurs, contact your Toyota dealer.

- The indicator light stays on.
- The indicator light does not start flashing when the key is removed from the key slot.
- The indicator light flashes inconsistently.

Inserting the registered key in the key slot automatically cancels the system, which enables the hybrid system to start. The indicator light will go off.

For your Toyota dealer to make you a new key with built–in transponder chip, your dealer will need your key number and master key. However, there is a limit to the number of additional keys your Toyota dealer can make for you.

NOTICE
Do not modify, remove or disassemble the hybrid vehicle immobilizer system. If any unauthorized changes or modifications are made, proper operation of the system cannot be guaranteed.

Not For Reproduction

Smart entry and start system

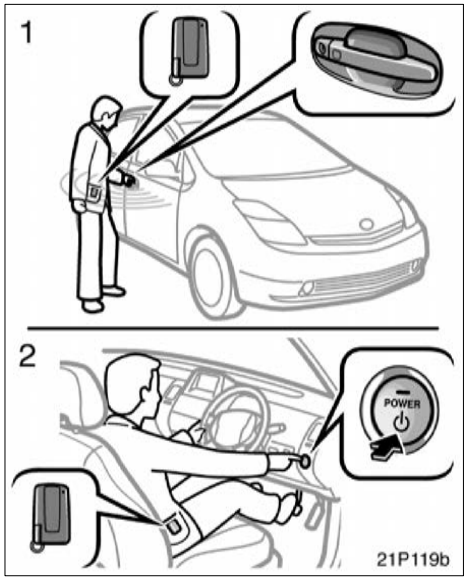

1. **Locking and unlocking**
2. **Starting the hybrid system**

By carrying a smart key, you can lock and unlock the doors and start the hybrid system.

For locking the doors, see “Locking the doors with smart function” on page 28. For unlocking the doors, see “Unlocking the door(s) with smart function” on page 29. For starting the hybrid system, see “Push button start system” on page 120.

If the smart key battery is discharged, the smart function cannot be used. Use the mechanical key attached to the smart key by inserting it in the driver’s door keyhole to lock or unlock door. To start the hybrid system, insert the smart key into the key slot. In order to activate the smart function, the battery should be replaced. For details, see “—Replacing battery” on page 34.

You can deactivate the smart function by using the cancel switch. In this case, all the smart function will be deactivated. For details, see “DEACTIVATING THE SMART FUNCTION” on page 31.

Not For Reproduction

INFORMATION

- ***Be sure to take the smart key with you.***
- ***In the following cases, the smart function or wireless remote control feature may not operate properly. (If this happens, use a mechanical key to lock or unlock the driver’s door and a smart key to start the hybrid system.)***
  - ◆ ***When facilities issuing strong electromagnetic waves such as TV towers, electric power stations, broadcasting stations are nearby.***
  - ◆ ***When you are carrying a smart key together with a mobile communications system such as a two–way radio or cellular phone.***
  - ◆ ***When the smart key is in contact with or covered by a metallic object.***
  - ◆ ***When another person is operating a wireless remote control function on another vehicle near your vehicle.***

- *If you do not drive your vehicle, store the smart key, keeping it at least 5 m (16 ft.) away from the vehicle.*

⚠ CAUTION

- **People with implanted pacemakers or cardiac defibrillators should keep away from the smart entry and start system antennas. For the antenna locations, see "ANTENNA LOCATION" on page 24. The radio waves may affect the operation of such devices. If necessary, the entry function can be disabled. Ask your Toyota dealer for details, such as the frequency of radio waves and timing of emitting the radio waves. Then, consult your doctor to see if you should disable the entry function.**
- **Users of any electrical medical device other than implanted pacemakers and implanted cardiac defibrillators should consult the manufacturer of the device for information about its operation under the influence of radio waves. Radio waves could have unexpected effects on the operation of such medical devices.**

For details for disabling the entry function, see "DEACTIVATING THE SMART FUNCTION" on page 31.

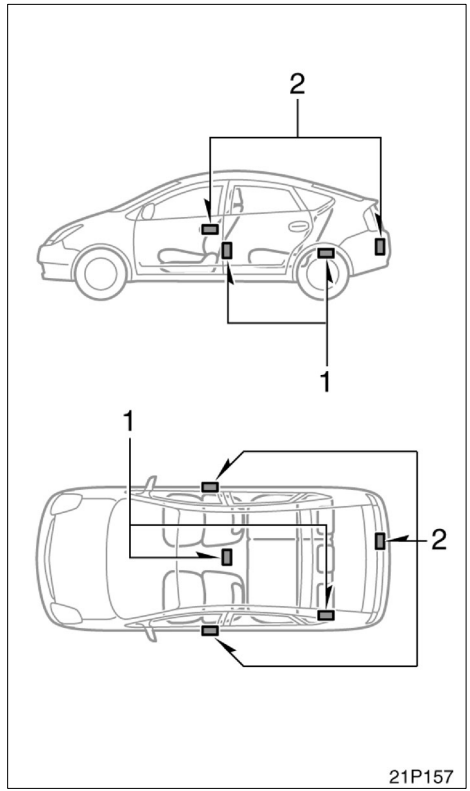

Not For Reproduction

ANTENNA LOCATIONS

1. Antenna inside cabin
2. Antenna outside cabin

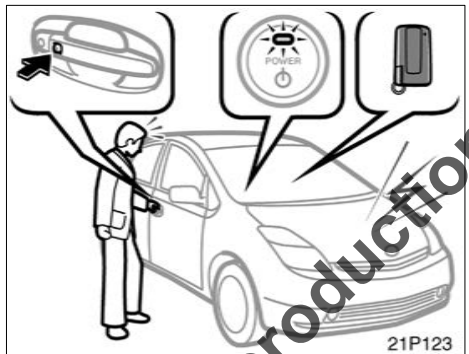

ALARMS AND WARNING LIGHT

Your vehicle is equipped with alarms inside and outside, as well as warning light in the instrument cluster, that remind you if there is a problem involving the smart entry and start system.

This warning light will come on when the "IG–ON" mode is enabled and will go off after a few seconds.

If an alarm sounds or the warning light comes on, be sure to check your vehicle and smart key.

(a) The hybrid system was not turned off and the transaxle was in a position other than "P".

When the driver's door is opened with the hybrid system in "ACC" or "IG–ON" and with the transaxle in a position other than "P".

Inside alarm: Beeps continuously

Multi–information display: Warning message

Alarms will be turned off by any of the following operations:

- Closing the driver's door
- Pressing the "P" position switch
- Turning off the hybrid system

Not For Reproduction

(b) The smart key was brought outside the vehicle with the transaxle in a position other than "P".

When the driver's door is opened or closed with the hybrid system not to be turned off and with the transaxle in a position other than "P", it is determined that the smart key is not in the vehicle.

Inside alarm: Beeps continuously

Outside alarm: Beeps continuously

Warning light: On

Alarms will be turned off by any of the following operations:

- Pressing the "P" position switch
- Bringing the smart key inside the vehicle
- Turning off the hybrid system

(c) The hybrid system was not turned off with the transaxle in "P".

When the driver's door is opened with the hybrid system in "ACC" and with the transaxle in "P".

Inside alarm: 3 beeps

In the "IG–ON" mode, an alarm will not sound.

(d) The smart key was brought outside the vehicle.

When the driver's door is opened or closed with the hybrid system not to be turned off (and with the transaxle in "P"), it is determined that the smart key is not in the vehicle.

Inside alarm: One beep

Outside alarm: 3 beeps

Warning light: On

(e) Locking with smart function was attempted with the hybrid system not to be turned off.

When you attempt to lock all the doors using smart locking function with the hybrid system not to be turned off and with the transaxle in a position other than "P".

Outside alarm: One beep (sounds for 2 seconds.)

Warning light: On

At this time, the doors cannot be locked.

(f) The smart key was brought outside the vehicle.

When a door other than the driver's door is opened or closed with the hybrid system not to be turned off, it is determined that the smart key is not in the vehicle.

Inside alarm: One beep

Outside alarm: 3 beeps

Warning light: On

Not For Reproduction

(g) Preventing the key from being locked inside the vehicle

When you close the door with the hybrid system off but with the smart key left in the vehicle, and attempt to lock all the doors using smart locking function, it is determined that the smart key is in the vehicle.

Outside alarm: One beep (sounds for 2 seconds)

INFORMATION
• ***This function may not operate when the smart key is left on the instrument panel, luggage cover, floor or in the glove box.***
• ***The function may operate if the smart key is brought outside but it is very close to the door window or door handle.***

(h) Low smart key battery

When the hybrid system is turned to "ACC" or "OFF" about 20 minutes after the hybrid system is turned on or to "IG–ON", it is determined that the smart key battery voltage is low.

Inside alarm: One beep

(i) Outside of effective range

When the "POWER" switch is pressed, it is determined that the smart key is not in the vehicle.

Inside alarm: One beep

Warning light: On (for 5 seconds)

(j) Open door warning

When you attempt to lock all the doors using smart locking function with the hybrid system turned off but with any door open.

Outside alarm: One beep (sounds for 10 seconds)

Alarms will be turned off by either of the following operations:

- Closing all the doors
- Pressing the unlock button on the smart key

Not For Reproduction

Warning and its meaning

Inside warning alarm	Outside warning alarm	Warning light	Causes
One beep (sounds continuously)	—	—	The driver's door was opened when the hybrid system was in "ACC" or "IG–ON" and when the transaxle was in a position other than "P".
One beep (sounds continuously)	One beep (sounds continuously)	On	The driver brought out the smart key from the vehicle with the hybrid system not to be turned off and with the transaxle in a position other than "P".
Beeps (sound intermittently)	—	—	The driver's door was opened when the hybrid system was in "ACC" and when the transaxle was in "P".
One beep	3 beeps	On	The driver brought out the smart key from the vehicle with the hybrid system not to be turned off and with the transaxle in "P".
—	One beep (sounds for 2 seconds)	On	The lock switch was pressed with the hybrid system not to be turned off and with the transaxle in "P".
One beep	3 beeps	On	The passenger brought out the smart key from the vehicle with the hybrid system not to be turned off.
—	One beep (sounds for 2 seconds)	—	The lock switch was pressed when the hybrid system was off but with the smart key left in the vehicle.
One beep	—	—	The key battery voltage become about 2 V. (3 V for normal operation)
One beep	—	On (for 5 seconds)	The "POWER" switch was pressed when the smart key was not in the effective range of the system.
—	One beep (sounds for 10 seconds)	—	The lock switch was pressed when the hybrid system was off but any door was opened.

Not For Reproduction

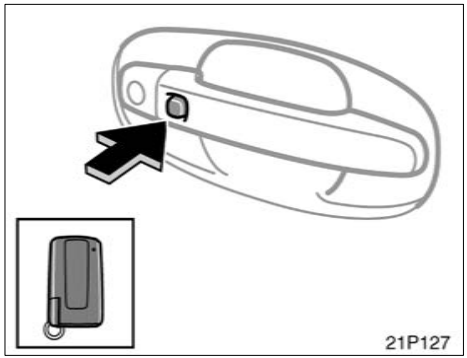

Side door

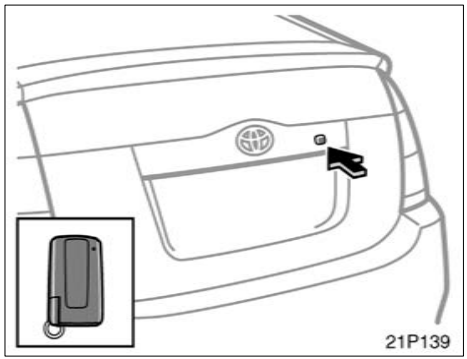

Back door

LOCKING THE DOORS WITH SMART FUNCTION

The smart entry and start system will lock the doors without being inserted into the door keyhole.

When you exit the vehicle carrying the smart key and push the lock button on the outside front door handle or back door with all the doors closed, all the doors will be locked provided that the electronic code in the key corresponds to the registered ID code for the vehicle.

At this time, you will hear one beep and the turn signal lights flash once. However, when you push the lock button on the outside front door handle or back door with any door not closed securely, a beep sounds for 10 seconds.

NOTICE

If the key is in the vehicle, do not perform door locking operation, or you might lock your keys inside the vehicle.

INFORMATION

- ***The rear doors are not equipped with smart function.***
- ***When locking the doors, be sure to push the lock button on the outside front door handle or back door slowly and surely. If you push the button quickly, the doors may not lock.***
- ***When opening or closing a door, do not touch the lock button on the outside door handle or back door. If you push the button, an alarm sounds 10 seconds.***
- ***When a wireless remote control is used to lock the doors and a smart key is left in the effective range of the smart function in the vehicle, the doors cannot be unlocked using the smart function. In this case, use the wireless remote function to unlock the doors.***
- ***You cannot activate smart unlocking functions within 3 seconds after the smart locking function is activated.***

Not For Reproduction

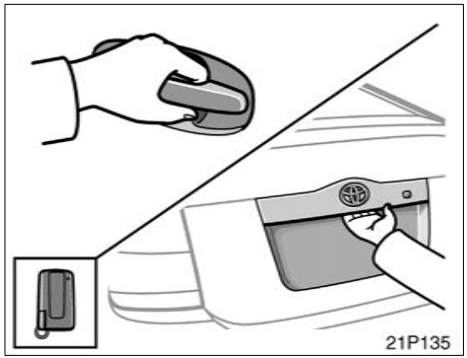

UNLOCKING THE DOORS WITH SMART FUNCTION

The smart entry and start system can be used to unlock the doors without being inserted into the door keyhole.

When you get close to your vehicle (about 1 m (3 ft.) from each outside front door handle), and are carrying the smart key, the electronic code emitted from the key is automatically checked to determine if it corresponds to the registered ID code for the vehicle. When you take hold of the side back of the outside door handle surface, it will unlock. At this time, two beeps sound and the turn signal lights flash twice.

When you push and hold down the back door opener switch, carrying the smart key, the ID code is checked in the same way as in the front door case. And all the doors will unlock. At this time, two beeps sound and the turn signal lights flash twice.

When you get close to your vehicle (about 1 m or 3 ft. from either front door), carrying the smart key or unlock the back door using smart key function, the interior light comes on for 15 seconds if the interior light switch is in the "DOOR" position. However, the interior lights go out when you push the power door lock switch in the lock position or press the "POWER" switch once or twice from the off setting to select the "ACC" or "IG–ON" mode without depressing the brake pedal. For further information, see "Interior lights" on page 98.

You have 30 seconds to open a door after operating the smart unlocking function. If a door is not opened by then, all the doors will be automatically locked again.

Not For Reproduction

INFORMATION

- ***The rear doors are not equipped with smart function.***
- ***When unlocking the doors, be sure to take hold of the back side of the outside door handle firmly as shown in the illustration. Taking hold of the handle with a gloved hand might cause a delay in unlocking.***

- ***When you take hold of the handle or push the back door opener to unlock the doors, be sure to confirm that the doors have been unlocked. If the two beeps and the turn signal lights flash twice, the doors are unlocked. At this time, you can pull the outside door handle or push the back door opener to open the door. If you quickly move closer to the vehicle or pull the outside door handle or push the back door opener quickly, the doors might not unlock. If you cannot open the door by pulling the outside door handle or pushing the back door at this time, push back the outside door handle to the original position or release your hand from the back door and then try again.***
- ***If you bring the smart key very close to the outside door handle or the back door opener, the doors might not lock.***

- ***If another person who is not carrying a smart key takes hold of an outside door handle or push the back door opener when you are within the effective range of the smart function, the doors may not unlock.***
- ***If a large amount of water is applied to the outside door handle or the back door during heavy rain or a car wash, and someone carrying a smart key is near the vehicle, the doors might be unlocked. However, if the outside front door handle is not pulled out or back door opener not pushed, the doors will lock automatically after about 30 seconds.***
- ***To ensure the unlocking doors, perform unlocking operation within 3 seconds after getting close to the vehicle (about 1 m or 3 ft. from the front doors or back door). If it takes longer than that, unlocking function may not be enabled.***

Not For Reproduction

BATTERY POWER SAVING

When doors are locked, the smart entry and start system transmits electromagnetic waves to the outside of the vehicle at regular intervals. For this reason, the vehicle battery will be discharged if the vehicle is left for a long time. If the key is left within the effective range of the smart function outside of the vehicle, the key and the vehicle transmit electromagnetic waves periodically. If these conditions continue for a long time, the battery in the key and vehicle will be discharged.

To prevent the batteries from being discharged, the smart function is automatically deactivated in the following conditions:

- If there is no response from the key for more than 14 days
- If the key is left within the effective range of the smart function outside of the vehicle for more than 10 minutes

To reactivate the smart function, perform any of the following:

(a) Press the lock button on the outside front door handle or back door while carrying the smart key.

(b) Perform a wireless remote control operation.

(c) Insert and turn the mechanical key in the keyhole of the driver's door.

INFORMATION

- ***To maintain communication with the vehicle, smart keys use built–in battery power. The battery service life is about 1 to 3 years on average. If battery power becomes insufficient, replace the battery with a new one.***
- ***The smart key continually receives electromagnetic waves, and if it receives strong electromagnetic waves over a period of time, the battery can be drastically run down. Therefore, avoid storing smart keys near any electrical appliances.***

  Here is a list of electrical appliances which may have adverse effects on the smart key performance: TVs, personal computers, cellular phone or cordless phone recharger units, electric light stands and fluorescent desk lights

  Note that you should always keep such electrical appliances at least 1 m (3 ft.) away from the smart key.

Not for Reproduction

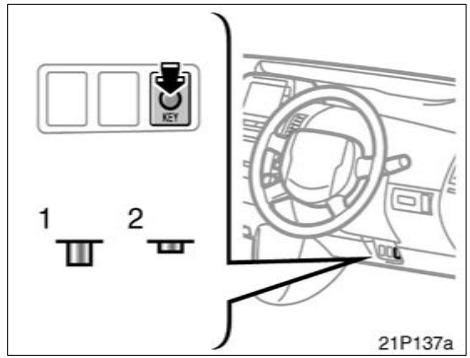

1. Smart function is on.
2. Smart function is off.

DEACTIVATING THE SMART FUNCTION

The cancel switch for this function is located at the bottom of the instrument panel on the driver side. When you push the switch, the smart function will be deactivated. Pushing the switch again will reactivate the function.

When the smart function is deactivated, use a mechanical key or wireless remote control function key to lock and unlock the doors. To start the hybrid system, insert a smart key into the key slot.

If you do not intend to drive your vehicle for a long time, push the cancel switch to deactivate the smart function.

INFORMATION
The smart function will be deactivated in the following cases: ● ***The cancel switch is turned on.*** ● ***The smart key is inserted into the key slot.*** ● ***The battery of the smart key is discharged.***

Wireless remote control—

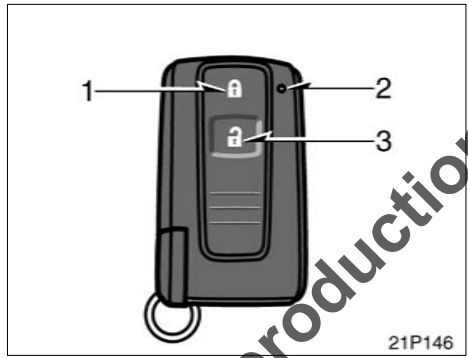

1. Lock switch

2. Indicator light

3. Unlock switch

The wireless remote control system is designed to lock or unlock all the side doors and back door, or activate the theft deterrent system from a distance within approximately 1 m (3 ft.) of the vehicle.

When you operate any switch, push it slowly and securely. At this time, the indicator light flashes once.

The wireless remote control key is an electronic component. Observe the following instructions in order not to cause damage to the key.

- Do not leave the key in places where the temperature becomes high such as on the dashboard.
- Do not disassemble it.
- Avoid knocking it hard against other objects or dropping it.
- Avoid putting it in water.

If your vehicle is equipped with smart entry and start system, you can use up to 5 master keys for the same vehicle. In case of the vehicle not equipped with smart entry and start system, up to 4 master keys are available. Contact your Toyota dealer for detailed information.

If the wireless remote control key does not actuate the doors, or does not operate from a normal distance, or the indicator light on the key is dimmed or does not come on:

- Check for closeness to a radio transmitter such as a radio station or an airport which can interfere with normal operation of the key.
- The battery may have been consumed. Check the battery in the key. To replace the battery, see following "—Replacing battery" on page 34.

Not For Reproduction

If you lose your key, contact your Toyota dealer as soon as possible to avoid the possibility of theft, or an accident. (See “If you lose your keys” on page 251.)

—Locking and unlocking doors

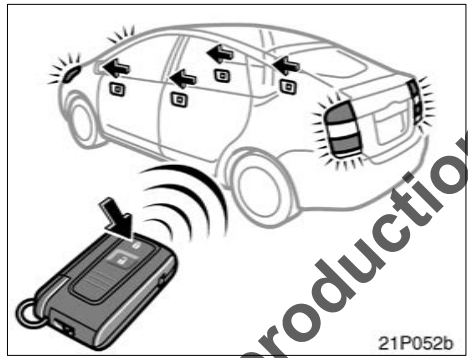

Locking operation

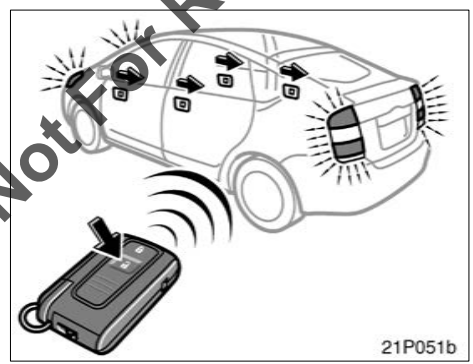

Unlocking operation

Not For Reproduction

To lock and unlock all the doors, push the switches slowly and securely.

To lock: Push the lock switch. All the side doors and back door are locked simultaneously. At this time, the turn signal lights will flash once.

Check to see that the doors are securely locked.

If any of the doors is not securely closed or if the key is in the key slot, locking cannot be performed by the lock switch. At this time, a beep will sound for 10 seconds on the vehicle with smart entry and smart system. However, if the key is in the key slot, a beep will not sound. To stop the beep, close all the side doors and back door securely or push the unlock switch.

The buzzer can be disabled. For details, contact your Toyota dealer.

To unlock: Push the unlock switch. All the doors are unlocked simultaneously. At this time, the turn signal lights flash twice.

You have 30 seconds to open a door after using the wireless remote unlock feature. If a door is not opened by then, all the doors will be automatically locked again.

The timing for the automatic door lock function can be changed. For details, contact your Toyota dealer.

If the lock or unlock switch is kept pressed in, the locking or unlocking operation is not repeated. Release the switch and then push it again.

The following adjustments can be made in this system. For details, contact your Toyota dealer:

- Cancelling the wireless door locking or unlocking function
- Cancelling the flash of the turn signal lights

—Replacing battery

For replacement, use a CR2032 lithium battery or equivalent and a special screwdriver.

⚠ CAUTION

Special care should be taken that small children do not swallow the removed battery or components.

NOTICE

- ***When replacing the battery, be careful not to lose the components.***
- ***Replace only with the same or equivalent type recommended by a Toyota dealer.***
- ***Dispose of used batteries according to the local laws.***

Replace the battery by following procedures.

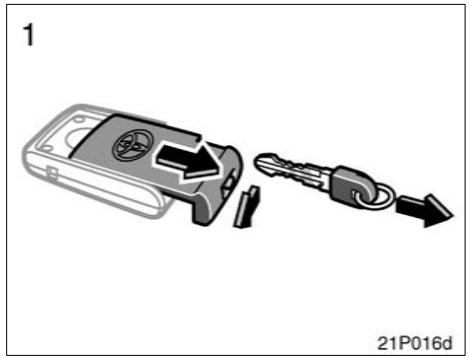

1. Remove the mechanical key and cover with slide the lock knob in the arrow direction.

Not For Reproduction

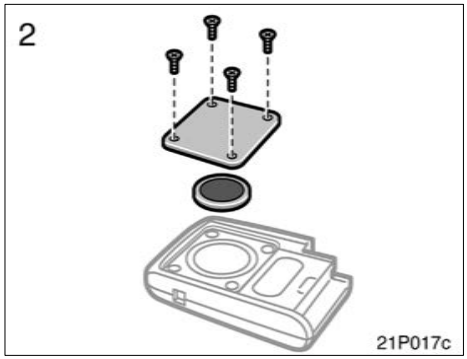

2. Remove the 4 screws to take out the lid of the module.

NOTICE
Do not bend the terminals.

3. Remove the discharged battery and put in a new battery with positive (+) side up.

NOTICE
◆ ***Make sure the positive side and negative side of the battery are faced correctly.***
◆ ***Do not replace the battery with wet hands. Water may cause unexpected rust.***
◆ ***Do not touch or move any components inside the transmitter, or it may interfere with proper operation.***
◆ ***Be careful not to bend the electrode when inserting the battery and that dust or oils do not adhere to the case.***

4. Install the lid with the 4 screws.

NOTICE
Take care not to damage or bend the O-ring when installing.

5. Replace the mechanical key and cover with slide the lock knob.

After replacing the battery, check that the key operates properly. If the key still does not operate properly, contact your Toyota dealer.

Not For Reproduction

Side doors—

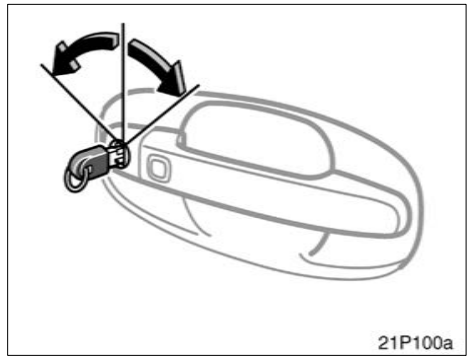

LOCKING AND UNLOCKING THE DRIVER'S DOOR WITH MECHANICAL KEY

Insert the mechanical key into the keyhole and turn it.

To lock: Turn the key forward.
To unlock: Turn the key backward.

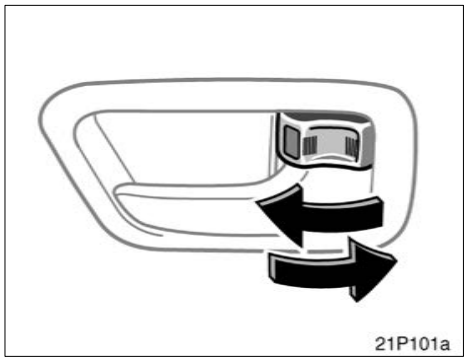

LOCKING AND UNLOCKING WITH INSIDE LOCK KNOB

Move the lock knob.

To lock: Push the knob forward.
To unlock: Pull the knob backward.

The driver's door can be opened by pulling the inside door handle even if the lock knob is depressed.

If you want to lock the door from the outside, set the knob in the lock position before closing the door. The outside door handle must be held up while the front door is being closed. Be careful not to lock your keys in the vehicle.

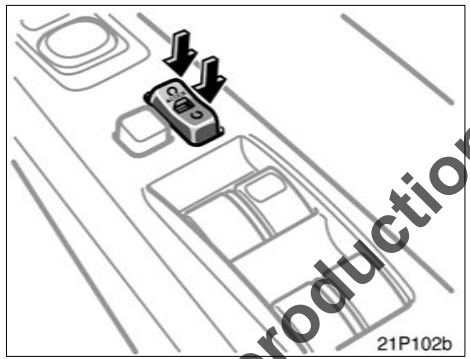

LOCKING AND UNLOCKING WITH POWER DOOR LOCK SWITCH

Push the switch.

To lock: Push the switch down on the front side.
To unlock: Push the switch down on the rear side.

All the doors lock or unlock simultaneously.

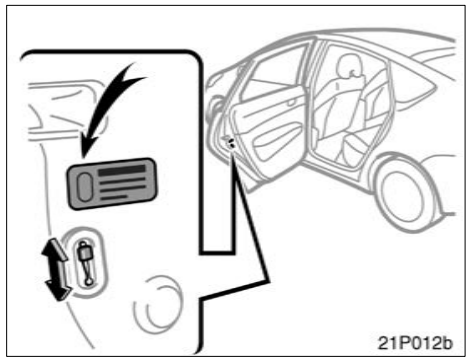

REAR DOOR CHILD–PROTECTORS

Move the lock lever to the "LOCK" position as shown on the label.

When the child–protector is locked, you cannot open the rear door by the inside door handle. We recommend using this feature whenever small children are in the vehicle.

Not For Reproduction

Back door

⚠ CAUTION

Before driving, be sure that the doors are closed and locked, especially when small children are in the vehicle. Along with the proper use of seat belts, locking the doors helps prevent the driver and passengers from being thrown out from the vehicle in an accident. It also helps prevent the doors from being opened unintentionally.

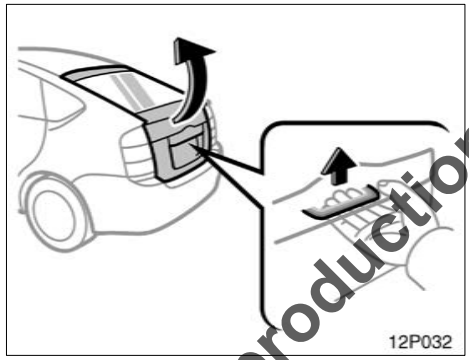

To open the back door, push the back door opener and raise the back door.

If the back door opener does not operate, see “If you cannot operate back door opener” on page 252.

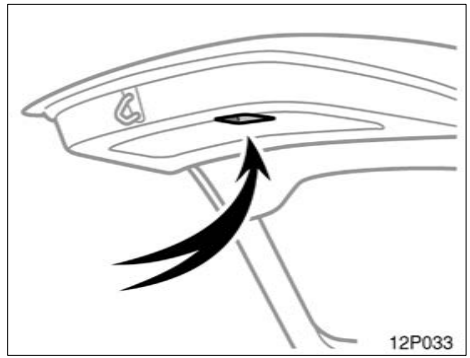

When closing the back door, the inside handle can be used to make the reach easier.

See “Luggage stowage precaution” on page 222 for precautions to observe when loading luggage.

To close the back door, lower it and press down on it. After closing the back door, try pulling it up to make sure it is securely closed.

Not For Reproduction

⚠ CAUTION

Keep the back door closed while driving. This not only keeps the luggage from being thrown out, but also prevents exhaust gases from entering the vehicle.

If the 12 volt battery is disconnected or run down, the back door will be automatically locked and the back door system may not work after you reconnect, replace or recharge the 12 volt battery. In any of these cases, normalize the back door system by following procedure.

1. Unlock the back door with the remote control key or power door lock switch.
2. Close the back door completely by hand.

If the back door system does not operate properly after the above procedure, there may be a problem in the system. Contact your Toyota dealer.

Power windows

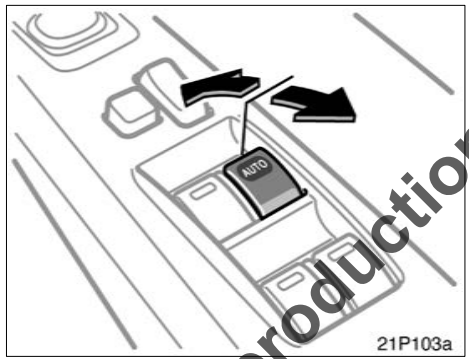

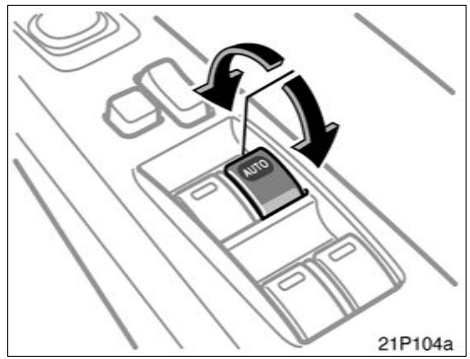

Not For Reproduction

The windows can be operated with the switch on each door.

The power windows work when the “IG–ON” mode is enabled.

Key off operation: If both front doors are closed, they work for 43 seconds even after the hybrid system is stopped. They stop working when either front door is opened.

OPERATING THE DRIVER’S WINDOW

Use the switch on the driver’s door.

Normal operation: The window moves as long as you hold the switch.

To open: Lightly push down the switch.
To close: Lightly pull up the switch.

Automatic operation: Push the switch completely down or pull it completely up, and then release it. The window will fully open or close. To stop the window partway, lightly move the switch in the opposite direction and then release it.

Jam protection function: If something gets caught between the window and window frame during automatic closing operation or key off closing operation, the window stops and opens halfway.

If the window receives a strong impact, this function may work even if nothing is caught.

If the 12 volt battery is disconnected or run down, the power window may not operate automatically and the jam protection function will not function correctly after you reconnect, replace or recharge the 12 volt battery. In any of these cases, you should normalize the power window.

To normalize the power window:

1. Push down the power window switch and lower the window halfway.
2. Pull up the switch until the window closes and hold the switch for a second.

Make sure that the window opens and closes automatically. If the power window cannot be operated properly, have it checked by your Toyota dealer.

⚠ CAUTION

- **Never try jamming any part of your body to activate the jam protection function intentionally, as it could result in death or serious injury.**
- **The jam protection function may not work if something gets caught just before the window is fully closed.**

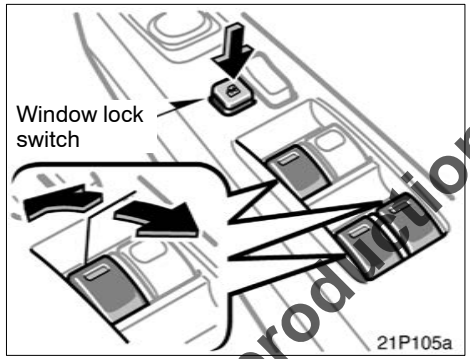

OPERATING THE PASSENGERS' WINDOWS

Use the switch on each passenger's door or the switches on the driver's door that control each passengers' window.

The window moves as long as you hold the switch.

To open: Push down the switch.
To close: Pull up the switch.

If you push in the window lock switch on the driver's door, the passengers' windows cannot be operated.

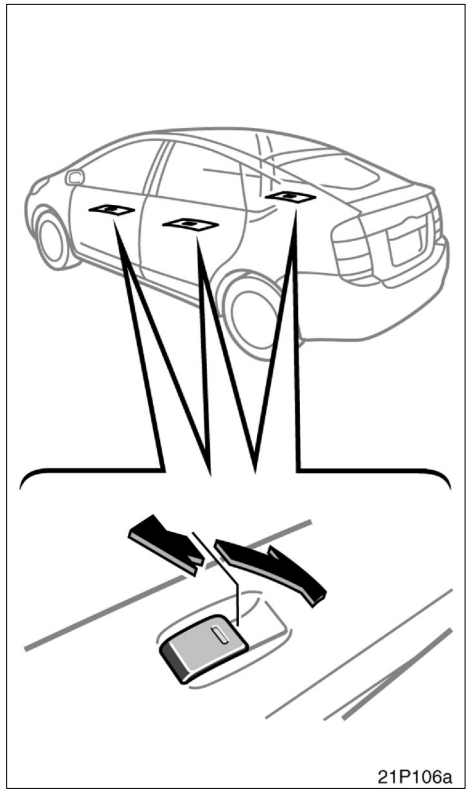

Not For Reproduction

⚠ CAUTION

To avoid death or serious injury, you must do the following.

- **Before you close the power windows, always make sure there is nobody around the power windows. You must also make sure the heads, hands and other parts of the bodies of all occupants are kept completely inside the vehicle. If someone's neck, head or hands get caught in a closing window, it could result in death or serious injury. When anyone closes the power windows, make sure he or she operates the windows safely.**
- **When small children are in the vehicle, never let them use the power window switches without supervision. Use the window lock switch to prevent them from making unexpected use of the switches.**
- **Turn the hybrid system "OFF" and take the key with you, when you leave your vehicle.**

- **Never leave anyone (particularly a small child) alone in your vehicle, especially with the key still inserted or with the hybrid system other than "OFF". Otherwise, he/she could use the power window switches and get trapped in a window. Unattended person (particularly a small child) can be involved in a serious accident.**

Not For Reproduction

Hood

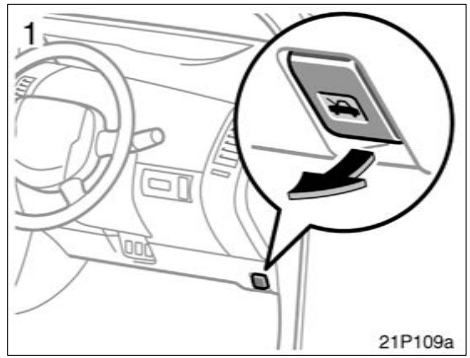

To open the hood:

1. **Pull the hood lock release lever. The hood will spring up slightly.**

⚠ CAUTION

Before driving, be sure that the hood is closed and securely locked. Otherwise, the hood may open unexpectedly while driving and an accident may occur.

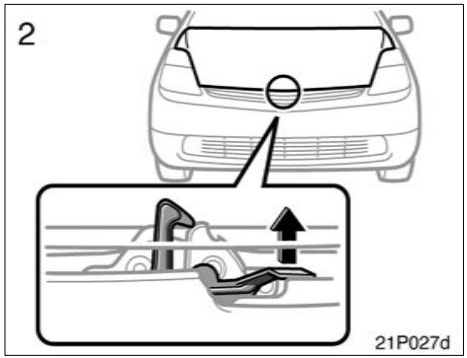

2. **In front of the vehicle, pull up the auxiliary catch lever and lift the hood.**

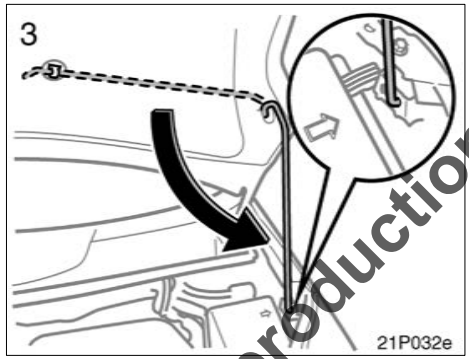

3. **Hold the hood open by inserting the support rod into the slot.**

Before closing the hood, check to see that you have not forgotten any tools, rags, etc. and return the support rod to its clip—this prevents rattles. Then lower the hood and make sure it locks into place. If necessary, press down gently on the front edge to lock it.

⚠ CAUTION

After inserting the support rod into the slot, make sure the rod supports the hood securely from falling down on to your head or body.

NOTICE

Be sure to return the support rod to its clip before closing the hood. Closing the hood with the support rod inserted into the slot could cause the hood to bend.

Not For Reproduction

Fuel tank cap

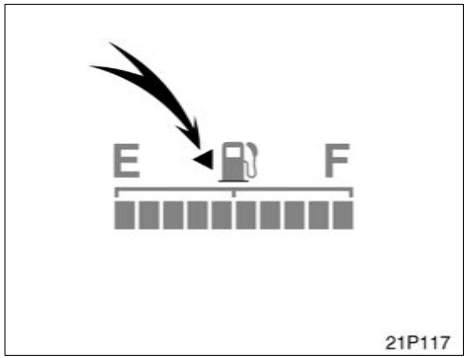

This indicates that the fuel filler door is on the left side of your vehicle.

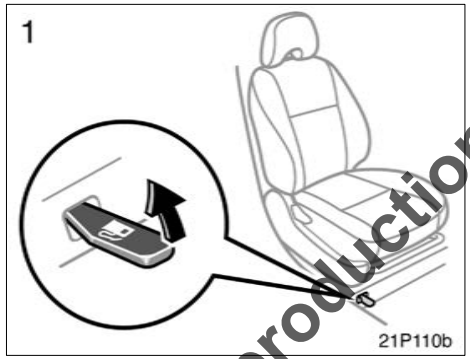

1. To open the fuel filler door, pull the lever up.

   When refueling, turn off the hybrid system.

⚠ CAUTION

- Do not smoke, cause spark or allow open flames when refueling. The fumes are flammable.
- When opening the cap, do not remove the cap quickly. In hot weather, fuel under pressure could cause injury by spraying out the filler neck if the cap is suddenly removed.
- Do not fuel additionally after initial auto–stop filling up, or fuel may splash out.

Not For Reproduction

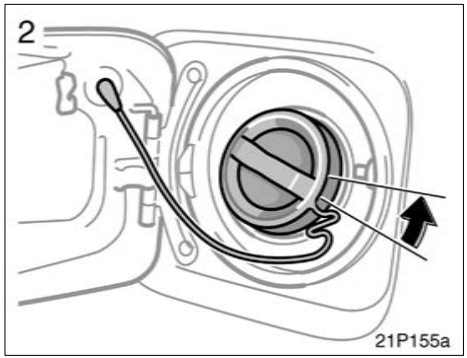

2. To remove the fuel tank cap, turn the cap counterclockwise. Pause slightly before removing it.

It is not unusual to hear a slight swoosh when the cap is opened.

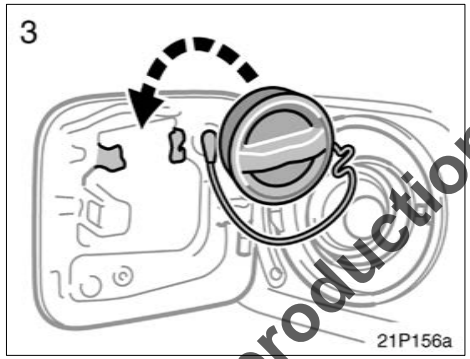

3. The removed cap can be stored on the cap hanger.

When installing the cap, turn the cap clockwise until you hear a click. When you hear the click, the cap is fully closed.

Not For Reproduction

⚠ CAUTION

- **Make sure the cap is tightened securely to prevent fuel spillage in case of an accident.**
- **Use only a genuine Toyota fuel tank cap for replacement. It is designed to regulate fuel tank pressure.**

NOTICE

To prevent damage to the cap, apply force only in the turning direction to the cap. Do not pull or pry it.

Not For Reproduction

OPERATION OF INSTRUMENTS AND CONTROLS

Occupant restraint systems

Seats 46
Front seats 46
Fold–down rear seat 50
Head restraints 51
Armrest 52
Seat belts 52
SRS airbags 59
Child restraint 73

Not For Reproduction

Seats

While the vehicle is being driven, all vehicle occupants should have the seatback upright, sit well back in the seat and properly wear the seat belts provided.

⚠ CAUTION

- **Do not drive the vehicle unless the occupants are properly seated. Do not allow any passengers to sit on top of a folded–down seatback, or in the luggage compartment or cargo area. Persons not properly seated and/or not properly restrained by seat belts can be severely injured in the event of emergency braking or a collision.**
- **During driving, do not allow any passengers to stand up or move around between seats. Otherwise, severe injuries can occur in the event of emergency braking or a collision.**

Front seats—
—Front seat precautions

Driver seat

⚠ CAUTION

The SRS driver airbag deploys with considerable force, and can cause death or serious injury especially if the driver is very close to the airbag.

Since the risk zone for driver airbag is the first 50–75 mm (2–3 in.) of inflation, placing yourself 250 mm (10 in.) from your diver airbag provides you with a clear margin of safety. This distance is measured from the center of the steering wheel to your breastbone. If you sit less than 250 mm (10 in.) away now, you can change your driving position in several ways:

- **Move your seat to the rear as far as you can while still reaching the pedals comfortably.**
- **Slightly recline the back of the seat. Although vehicle designs vary, many drivers can achieve the 250 mm (10 in.) distance, even with the driver seat all the way forward, simply by reclining the back of the seat somewhat. If reclining the back of your seat makes it hard to see the road, raise yourself by using a firm, non–slippery cushion, or raise the seat if your vehicle has that feature.**
- **If your steering wheel is adjustable, tilt it downward. This points the airbag toward your chest instead of your head and neck.**

The seat should be adjusted as recommended above, while still maintaining control of the foot pedals, steering wheel, and your view of the instrument panel controls.

Not For Reproduction

Front passenger seat

CAUTION

The SRS front passenger airbag also deploys with considerable force, and can cause death or serious injury especially if the front passenger is very close to the airbag. The front passenger seat should be as far from the airbag as possible with the seatback adjusted, so the front passenger sits upright.

Front seats (with SRS side airbags)

CAUTION

The SRS side airbags are installed in the driver and front passenger seats. Observe the following precautions.

- **Do not lean against the front door when the vehicle is in use, since the side airbag inflates with considerable speed and force. Otherwise, you may be killed or seriously injured.**
- **Do not use seat accessories which cover the area where the side airbags inflate. Such accessories may prevent the side airbags from activating correctly, causing death or serious injury.**
- **Do not modify or replace the seats or upholstery of the seats equipped with side airbags. Such change may prevent the side airbag system from activating correctly, disable the system or cause the side airbags to inflate accidentally, resulting in death or serious injury.**

Not For Reproduction

—Seat adjustment precautions

CAUTION

- **Do not adjust the seat while the vehicle is moving as the seat may unexpectedly move and cause the driver to lose control of the vehicle.**
- **Be careful that the seat does not hit a passenger or luggage.**
- **After adjusting the seat position, release the lever and try sliding the seat forward and backward to make sure it is locked in position.**
- **Make sure the seatback is securely locked by pushing forward and rearward on the top of the seatback. Failure to do so will prevent the seat belt from operating properly.**
- **Do not put objects under the seats. Otherwise, the objects may interfere with the seat–lock mechanism or unexpectedly push up the seat position adjusting lever and the seat may suddenly move, causing the driver to lose control of the vehicle.**

—Adjusting front seats

- **While adjusting the seat, do not put your hands under the seat or near the moving parts. Otherwise, your hands or fingers may be caught and injured.**

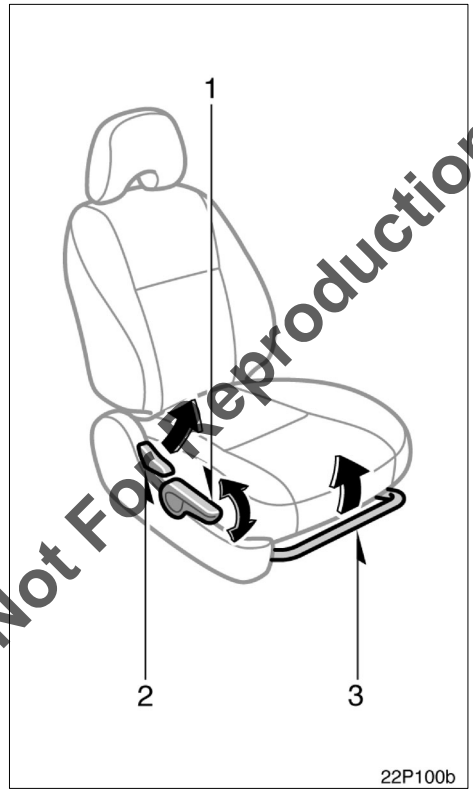

Not For Reproduction

1. SEAT HEIGHT ADJUSTING LEVER (Driver's seat only)

Pull up or push down the lever.

2. SEATBACK ANGLE ADJUSTING LEVER

Lean forward and pull the lever up. Then lean back to the desired angle and release the lever.

3. SEAT POSITION ADJUSTING LEVER

Hold the center of the lever and pull it up. Then slide the seat to the desired position with slight body pressure and release the lever.

—Flattening seatbacks

⚠ CAUTION

To reduce the risk of sliding under the lap belt during a collision, avoid reclining the seatback any more than needed. The seat belts provide maximum protection in a frontal or rear collision when the driver and the front passenger are sitting up straight and well back in the seats. If he/she is reclined, the lap belt may slide past his/her hips and apply restraint forces directly to the abdomen. In the event of a frontal collision, the more the seat is reclined, the greater the risk of death or serious injury.

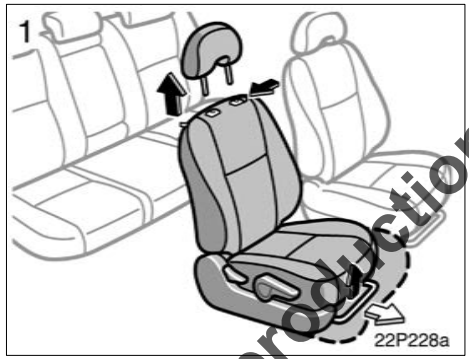

1. **Remove the head restraint. Hold the center of the lever and pull it up. Then slide the seat further forward than the front–most lock position.**

2. **Pull the seatback angle adjusting lever to unlock and push down the seatback.**

When returning the seatback upright, be careful not to make yourself hit by the seatback which will bound with considerable spring force.

After returning the seat to its original position, be certain to replace the head restraint.

Not For Reproduction

Fold–down rear seat

CAUTION

- **Do not allow passengers to ride on the flattened seat while driving; use the seat in the normal position.**
- **After putting back the seat, try pushing the seat and seatback forward and rearward to make sure it is secured in place. Be certain to replace head restraint.**

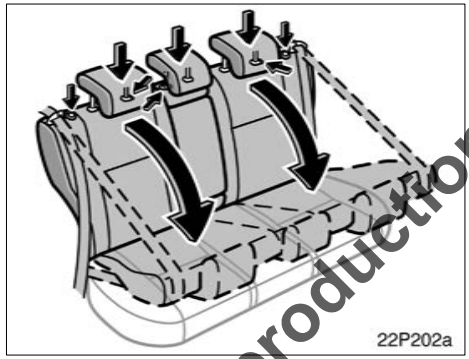

Lower the head restraints to the lowest position. Push down the lock release button and fold the seatback down.

Each seatback can be folded separately.

This will enlarge the luggage compartment as far as the seatbacks. See “Luggage stowage precautions” on page 222 for precautions when loading luggage.

CAUTION

When only rear left seat is folded down, rear seat alone can be used. Never sit on the center seat because the rear center seat belt cannot be fastened correctly when the rear left seat is folded down.

Not For Reproduction

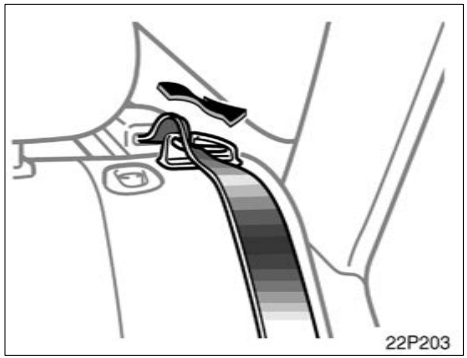

BEFORE RETURNING REAR SEAT

Make sure the shoulder belt pass through the guide when returning the seatback up.

If the shoulder belt on the rear right seat is off the guide, the air vent for cooling the hybrid battery may be blocked by the belt. If the hybrid battery cannot be cooled, the output performance is limited, reducing the driving performance.

⚠ CAUTION

When returning the seatback to the upright position, observe the following precautions in order to prevent death or serious injury in a collision or sudden stop:

- **Make sure seatback is securely locked by pushing forward and rearward on the top of the seatback. Failure to do so will prevent the seat belt from operating properly.**
- **Make sure the seat belts are not twisted or caught in the seatback and are arranged in the proper position and are ready to use.**

Not For Reproduction

Head restraints

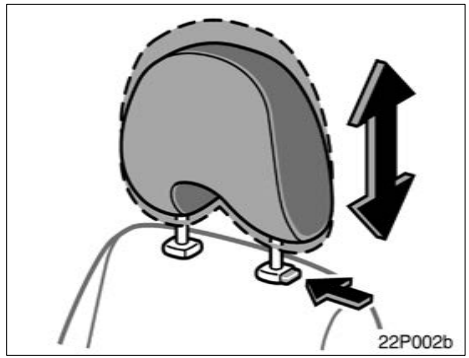

Front

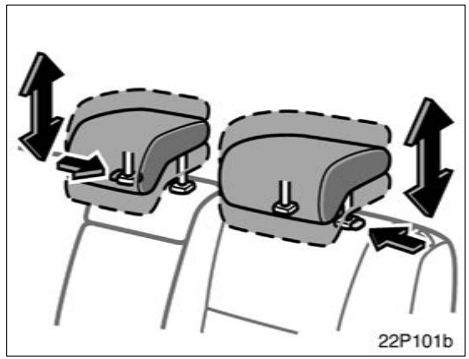

Rear

For your safety and comfort, adjust the head restraint before driving,

To raise: Pull it up.
To lower: Push it down while pressing the lock release button.

Rear center head restraint—When an occupant sits on the rear center seat, always pull up the rear center head restraint to the lock position.

The head restraint is most effective when it is close to your head. Therefore, using a cushion on the seatback is not recommended.

CAUTION

- **Adjust the center of the head restraint so that it is closest to the top of your ears.**
- **After adjusting the head restraint, make sure it is locked in position.**
- **Do not drive with the head restraints removed.**

Armrest

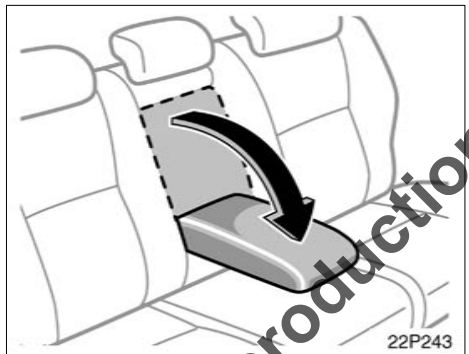

To use the armrest, pull it down as shown in the illustration.

NOTICE

To prevent damage to the armrest, avoid putting heavy loads on it.

Not For Reproduction

Seat belts—
—Seat belt precautions

Toyota strongly urges that the driver and passengers in the vehicle be properly restrained at all times with the seat belts provided. Failure to do so could increase the chance of injury and/or the severity of injury in accidents.

The seat belts provided for your vehicle are designed for people of adult size, large enough to properly wear them.

Child. Use a child restraint system appropriate for the child until the child becomes large enough to properly wear the vehicle's seat belts. For details, see "Child restraint" on page 73.

If a child is too large for a child restraint system, the child should sit in the rear seat and must be restrained using the vehicle's seat belt. According to accident statistics, the child is safer when properly restrained in the rear seat than in the front seat.

If a child must sit in the front seat, the seat belts should be worn properly. If an accident occurs and the seat belts are not worn properly, the force of the rapid inflation of the airbag may cause death or serious injury to the child.

Do not allow any children to stand up or kneel on either rear or front seats. An unrestrained child could suffer serious injury or death during emergency braking or a collision. Also, do not let the child sit on your lap. Holding a child in your arms does not provide sufficient restraint.

Pregnant woman. Toyota recommends the use of a seat belt. Ask your doctor for specific recommendations. The lap belt should be worn securely and as low as possible over the hips and not on the waist.

Injured person. Toyota recommends the use of a seat belt. Depending on the injury, first check with your doctor for specific recommendations.

If seat belt regulations exist in the country where you reside, please contact your Toyota dealer for seat belt replacement or installation.

⚠ CAUTION

Persons should ride in their seats properly wearing their seat belts whenever the vehicle is moving. Otherwise, they are much more likely to suffer serious bodily injury or death in the event of sudden braking or a collision.

When using the seat belts, observe the following precautions:

- **Use the belt for only one person at a time. Do not use a single belt for two or more people—even children.**
- **Avoid reclining the seatback any more than needed. The seat belts provide maximum protection in a frontal or rear collision when the driver and the front passenger are sitting up straight and well back in the seats. If you are reclined, the lap belt may slide past your hips and apply restraint forces directly to the abdomen or your neck may contact the shoulder belt. In the event of a frontal collision, the more the seat is reclined, the greater the risk of death or personal injury.**
- **Be careful not to damage the belt webbing or hardware. Take care that they do not get caught or pinched in the seat or doors.**
- **Inspect the belt system periodically. Check for cuts, fraying, and loose parts. Damaged parts should be replaced. Do not disassemble or modify the system.**
- **Keep the belts clean and dry. If they need cleaning, use a mild soap solution or lukewarm water. Never use bleach, dye or abrasive cleaners, or allow them to come into contact with the belts—they may severely weaken the belts. (See "Cleaning the interior" on page 257.)**
- **Replace the belt assembly (including bolts) if it has been used in a severe impact. The entire assembly should be replaced even if damage is not obvious.**

Australian owners: Observe the following additional WARNINGS.

Not For Reproduction

WARNING: Seat belts are designed to bear upon the bony structure of the body, and should be worn low across the front of the pelvis or the pelvis, chest and shoulders, as applicable; wearing the lap section of the belt across the abdominal area must be avoided.

Seat belts should be adjusted as firmly as possible, consistent with comfort, to provide the protection for which they have been designed. A slack belt will greatly reduce the protection afforded to the wearer.

Care should be taken to avoid contamination of the webbing with polishes, oils and chemicals, and particularly battery acid. Cleaning may safely be carried out using mild soap and water. The belt should be replaced if webbing becomes frayed, contaminated or damaged.

It is essential to replace the entire assembly after it has been worn in a severe impact even if damage to the assembly is not obvious.

Belts should not be worn with straps twisted.

Each belt assembly must only be used by one occupant; it is dangerous to put a belt around a child being carried on the occupant's lap.

WARNING: No modifications or additions should be made by the user which will either prevent the seat belt adjusting devices from operating to remove slack, or prevent the seat belt assembly from being adjusted to remove slack.

Not For Reproduction

—Fastening front and rear seat belts

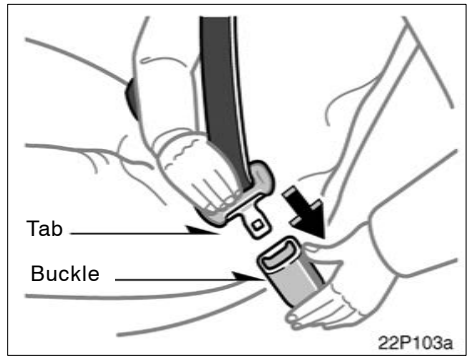

Adjust the seat as needed and sit up straight and well back in the seat. To fasten your belt, pull it out of the retractor and insert the tab into the buckle.

You will hear a click when the tab locks into the buckle.

The seat belt length automatically adjusts to your size and the seat position.

The retractor will lock the belt during a sudden stop or on impact. It also may lock if you lean forward too quickly. A slow, easy motion will allow the belt to extend, and you can move around freely.

When a passenger's shoulder belt is completely extended and is then retracted even slightly, the belt is locked in that position and cannot be extended. This feature is used to hold the child restraint system securely. (For details, see "Child restraint" on page 73.) To free the belt again, fully retract the belt and then pull the belt out once more.

If the seat belt cannot be pulled out of the retractor, firmly pull the belt and release it. You will then be able to smoothly pull the belt out of the retractor.

⚠ CAUTION

- **After inserting the tab, make sure the tab and buckle are locked and that the belt is not twisted.**
- **Do not insert coins, clips, etc. in the buckle as this may prevent you from properly latching the tab and buckle.**
- **If the seat belt does not function normally, immediately contact your Toyota dealer. Do not use the seat until the seat belt is fixed, because it cannot protect an adult occupant or your child from death or serious injury.**

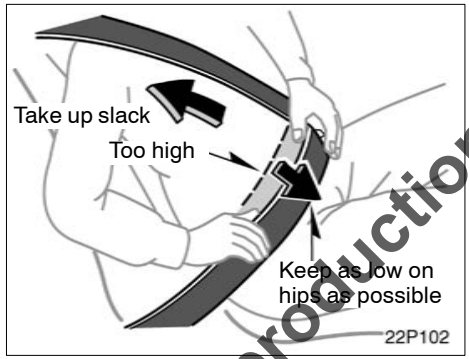

Adjust the position of the lap and shoulder belts.

Position the lap belt as low as possible on your hips—not on your waist, then adjust it to a snug fit by pulling the shoulder portion upward through the latch plate.

⚠ CAUTION

- **Both high-positioned lap belts and loose-fitting belts could cause death or serious injuries due to sliding under the lap belt during a collision or other unintended event. Keep the lap belt positioned as low on hips as possible.**
- **Do not place the shoulder belt under your arm.**

Not For Reproduction

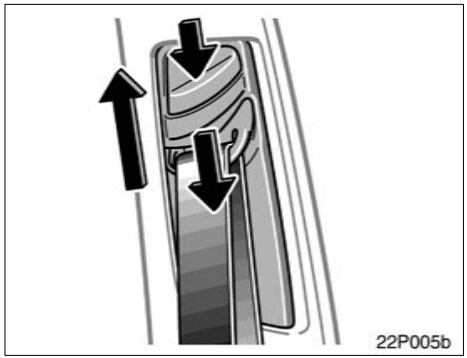

Seat belts with an adjustable shoulder anchor—

Adjust the shoulder anchor position to your size.

To raise: Slide the anchor up.
To lower: Push in the lock release button and slide the anchor down.

After adjustment, make sure the anchor is locked in position.

⚠ CAUTION

Always make sure the shoulder belt is positioned across the center of your shoulder. The belt should be kept away from your neck, but not falling off your shoulder. Failure to do so could reduce the amount of protection in an accident and cause death or serious injuries in a collision.

Not For Reproduction

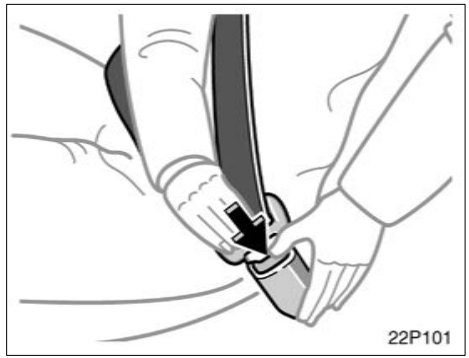

To release the belt, press the buckle release button and allow the belt to retract.

If the belt does not retract smoothly, pull it out and check for kinks or twists. Then make sure it remains untwisted as it retracts.

—Seat belt pretensioners

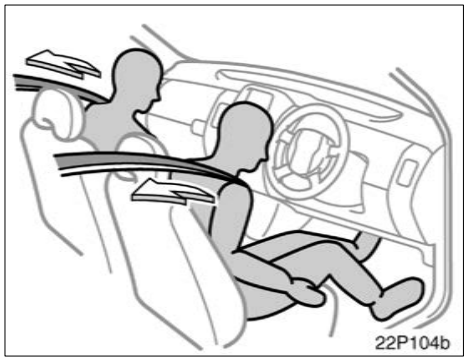

There are seat belt pretensioners for both front seats. They are designed to be activated in response to a severe frontal impact.

When the sensor detects a severe frontal impact, the front seat belts are quickly drawn back by the retractor so that the belts snugly restrain the occupants.

The seat belt pretensioners are activated even with no passenger in the front seat.

The seat belt pretensioner and SRS airbags may not operate together in all collisions.

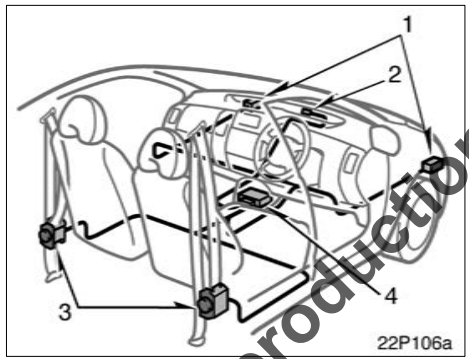

The seat belt pretensioner system consists mainly of the following components and their locations are shown in the illustration.

1. Front airbag sensors
2. SRS warning light
3. Seat belt pretensioner assemblies
4. Airbag sensor assembly

The seat belt pretensioners are controlled by the airbag sensor assembly. The airbag sensor assembly consists of a safing sensor and airbag sensor.

When the seat belt pretensioners are activated, an operating noise may be heard and a small amount of non–toxic gas may be released. This does not indicate that a fire is occurring. This gas is normally harmless.

Once the seat belt pretensioners have been activated, the seat belt retractors remain locked.

If the vehicle is involved in multiple collisions, the pretensioner will activate for the first collision, but will not activate for the second or subsequent collisions.

⚠ CAUTION

Observe the following precautions to reduce the risk of injury in the event of sudden breaking or an accident. Failure to do so may cause death or severe injury.

- **If the pretensioner has activated, the seat belt becomes locked: it cannot be further extended, nor will it return to the stowed position. The seatbelt cannot be used again and must be replaced at your Toyota dealer.**
- **Do not modify, remove, strike or open the seat belt pretensioner assemblies, airbag sensor or surrounding area or wiring. Consult your Toyota dealer about any repair and modification.**

Not For Reproduction

NOTICE

Do not perform any of the following changes without consulting your Toyota dealer. Such changes can interfere with proper operation of the seat belt pretensioners in some cases.

- ***Installation of electronic devices such as a mobile two-way radio, cassette tape player or compact disc player***
- ***Repairs on or near the front seat belt retractor assemblies***
- ***Modification of the suspension system***
- ***Modification of the front end structure***
- ***Attachment of a grille guard (bull bar, kangaroo bar, etc.), snowplow, winches or any other equipment to the front end***
- ***Repairs made on or near the front fenders, front end structure or console***

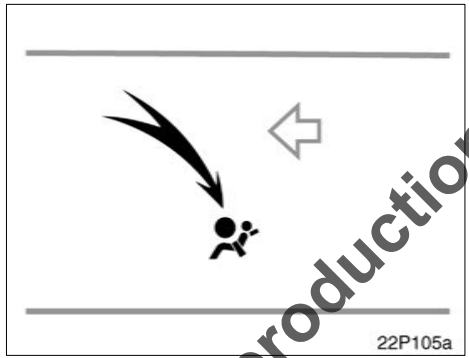

This indicator comes on when the "IG-ON" mode is enabled. It goes off after about 6 seconds. This means the seat belt pretensioners are operating properly.

The warning light system monitors the airbag sensor assembly, front airbag sensors, side and curtain shield airbag sensors, curtain shield airbag sensors, driver's seat position sensor, driver's seat belt buckle switch, seat belt pretensioner assemblies, interconnecting wiring and power sources. (For details, see "Service reminder indicators and warning buzzers" on page 107.)

If any of the following conditions occurs, this indicates a malfunction of the airbags or seat belt pretensioners. Contact your Toyota dealer as soon as possible.

- The light does not come on when the "IG-ON" mode is enabled or remains on for more than 6 seconds.
- The light comes on while driving.
- If either front seat belt does not retract or can not be pulled out due to a malfunction or activation of the relevant seat belt pretensioner.
- The seat belt pretensioner assembly or surrounding area has been damaged.

Not For Reproduction

SRS airbags—
—SRS driver and front passenger airbags

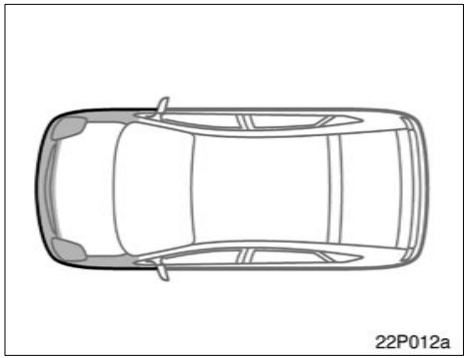

In the following cases, contact your Toyota dealer as soon as possible:

- The front part of the vehicle (shaded in the illustration) was involved in an accident that was not severe enough to cause the seat belt pretensioners to operate.
- The seat belt pretensioner assembly or surrounding area is scratched, cracked, or otherwise damaged.

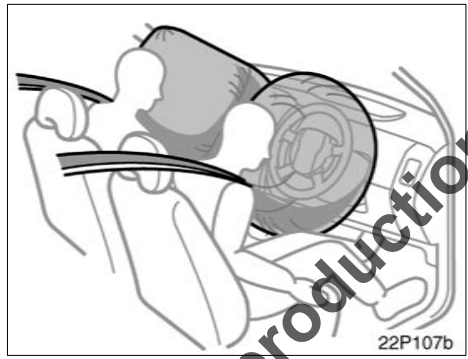

The SRS (Supplemental Restraint System) front airbags are designed to provide further protection for the driver and front passenger in addition to the primary safety protection provided by the seat belts.

In response to a severe frontal impact, the SRS front airbags work with the seat belts to help reduce injury by inflating. The SRS front airbags help reduce injuries mainly to the driver's or front passenger's head or chest caused by hitting the vehicle interior.

The front passenger airbag is activated even with no passenger in the front seat.

Always wear your seat belt properly.

CAUTION

- **The SRS front airbag system is designed only as a supplement to the primary protection of the driver and front passenger seat belt systems. The driver and front passenger can be killed or seriously injured by an inflating airbag if they do not wear the available seat belts properly. During sudden braking just before a collision, an unrestrained driver or front passenger can move forward into direct contact with or close proximity to the airbag which may then deploy during the collision. To ensure maximum protection in an accident, the driver and all passengers in the vehicle must wear their seat belts properly. Wearing a seat belt properly during an accident reduces the chances of death or serious injury or being thrown out of the vehicle. For instructions and precautions concerning the seat belt system, see "Seat belts" on page 52.**

Not For Reproduction

- **Improperly seated and/or restrained infants and children can be killed or seriously injured by the deploying airbags. An infant or child who is too small to use a seat belt should be properly secured using a child restraint system. Toyota strongly recommends that all infants and children be placed in the rear seat of the vehicle and properly restrained. The rear seat is the safest for infants and children. For instructions concerning the installation of a child restraint system, see "Child restraint" on page 73.**

The SRS front airbags are designed to deploy in response to a severe frontal impact within the shaded area between the arrows in the illustration.

The SRS front airbags will deploy if the severity of the impact is above the designed threshold level, comparable to an approximate 25 km/h (15 mph) collision when the vehicle has the impact straight into a fixed barrier that does not move or deform.

However, this threshold velocity will be considerably higher if the vehicle strikes an object, such as a parked vehicle or sign pole, which can move or deform on impact, or if the vehicle is involved in an underride collision (e.g. a collision in which the front of the vehicle "underrides", or goes under, the bed of a truck, etc.).

It is possible that in some collisions where the forward deceleration of the vehicle is very close to the designed threshold level, the SRS front airbags and the seat belt pretensioners may not activate together.

Always wear your seat belts properly.

Not For Reproduction

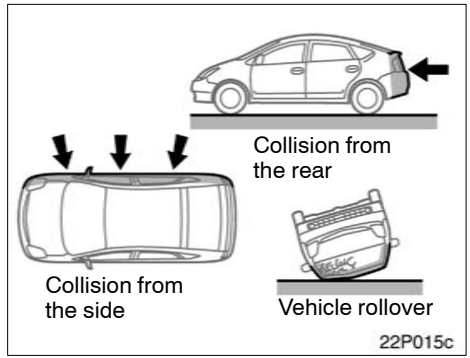

The SRS front airbags are generally not designed to inflate if the vehicle is involved in a side or rear collision, if it rolls over, or if it is involved in a low–speed frontal collision. But, whenever a collision of any type causes sufficient forward deceleration of the vehicle, deployment of the SRS front airbags may occur.

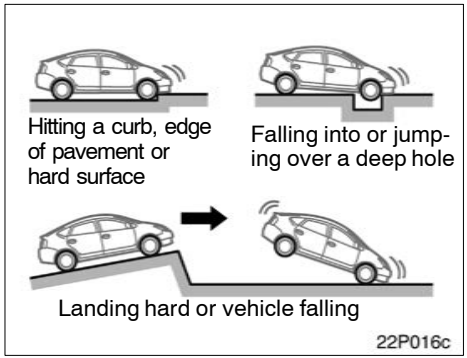

The SRS front airbags may also deploy if a serious impact occurs to the underside of your vehicle. Some examples are shown in the illustration.

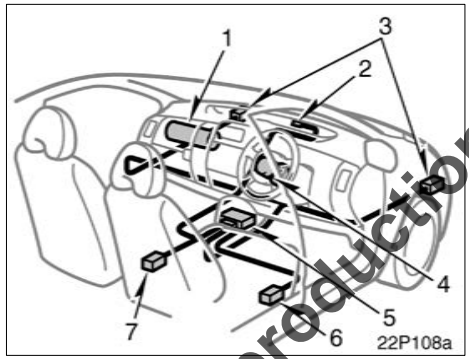

The SRS front airbag system consists mainly of the following components, and their locations are shown in the illustration.

1. Airbag module for front passenger (airbag and inflator)
2. SRS warning light
3. Front airbag sensors
4. Airbag module for driver (airbag and inflator)
5. Airbag sensor assembly
6. Driver's seat position sensor
7. Driver's seat belt buckle switch

The airbag sensor assembly consists of a safing sensor and airbag sensor.

The front airbag sensors constantly monitor the forward deceleration of the vehicle. If an impact results in a forward deceleration beyond the designed threshold level, the system triggers the airbag inflators. At this time a chemical reaction in the inflators very quickly fills the airbags with non–toxic gas to help restrain the froward motion of the occupants. The front airbags then quickly deflate, so that there is no obstruction of the driver's vision should it be necessary to continue driving.

When the airbags inflate, they produce a loud noise and release some smoke and residue along with non–toxic gas. This does not indicate a fire. This smoke may remain inside the vehicle for some time, and may cause some minor irritation to the eyes, skin or breathing. Be sure to wash off any residue as soon as possible to prevent any potential skin irritation with soap and water. If you can safely exit from the vehicle, you should do so immediately.

Not For Reproduction

Deployment of the airbags happens in a fraction of a second, so the airbags must inflate with considerable force. While the system is designed to reduce serious injuries, primarily to the head and chest, it may also cause other, less severe injuries to the face, chest, arms and hands. These are usually in the nature of minor burns or abrasions and swelling, but the force of a deploying airbag can cause more serious injuries, especially if an occupant's hands, arms, chest or head is in close proximity to the airbag module at the time of deployment. This is why it is important for the occupant to: avoid placing any object or part of the body between the occupant and the airbag module; sit straight and well back into the seat; wear the available seat belt properly; and sit as far as possible from the airbag module, while still maintaining control of the vehicle.

Parts of the airbag module (steering wheel hub, airbag cover and inflator) may be hot for several minutes after deployment, so do not touch! The airbags inflate only once. The windshield may be damaged by absorbing some of the force of the inflating airbag.

⚠ CAUTION

The driver or front passenger who is too close to the steering wheel or dashboard during airbag deployment can be killed or seriously injured. Toyota strongly recommends that:

- **The driver sit as far back as possible from the steering wheel while still maintaining control of the vehicle.**
- **The front passenger sit as far back as possible from the dashboard.**
- **All vehicle occupants be properly restrained using the available seat belts.**

- **Do not sit on the edge of the seat or lean against the dashboard when the vehicle is in use, since the front passenger airbag could inflate with considerable speed and force. Anyone who is up against, or very close to, an airbag when it inflates, can be killed or seriously injured. Sit up straight and well back in the seat, and always use your seat belt properly.**

Not For Reproduction

- Toyota strongly recommends that all infants and children be placed in the rear seat of the vehicle and be properly restrained.
- Do not allow a child to stand up or kneel on the front passenger seat, since the front passenger airbag could inflate with considerable speed and force. Otherwise, the child may be killed or seriously injured.
- Do not hold a child on your lap or in your arms. Use a child restraint system in the rear seat. For instructions concerning the installation of a child restraint system, see “Child restraint” on page 73.

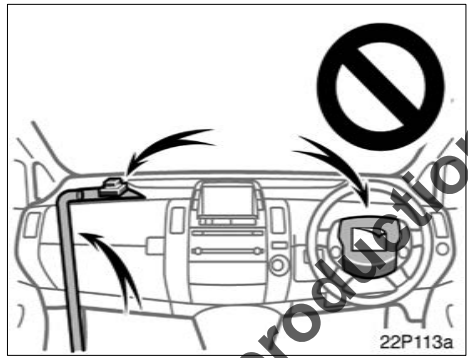

- Do not put anything or any part of your body on or in front of the dashboard or steering wheel pad that houses the front airbag system. They might restrict inflation or cause death or serious injury as they are projected rearward by the force of the deploying airbags. Likewise, the driver and front passenger should not hold objects in their arms or on their knees.

- Do not modify or remove any wiring. Do not modify, remove, strike or open any components, such as the steering wheel pad, steering wheel, column cover, dashboard near the front passenger airbag, front passenger airbag cover, passenger airbag or airbag sensor assembly. Doing so may prevent the front airbag system from activating correctly, cause sudden activation of the system or disable the system, which could result in death or serious injury.

Failure to follow these instructions can result in death or serious injury. Consult your Toyota dealer about any repair and modification.

Not For Reproduction

NOTICE

Do not perform any of the following changes without consulting your Toyota dealer. Such changes can interfere with proper operation of the SRS front airbag system in some cases.

- ***Installation of electronic devices such as a mobile two–way radio, cassette tape player or compact disc player***
- ***Modification of the suspension system***
- ***Modification of the front end structure***
- ***Attachment of a grille guard (bull bar, kangaroo bar, etc.), snowplow, winches or any other equipment to the front end***
- ***Repairs made on or near the front fenders, front end structure, console, steering column, steering wheel or dashboard near the front passenger airbag***

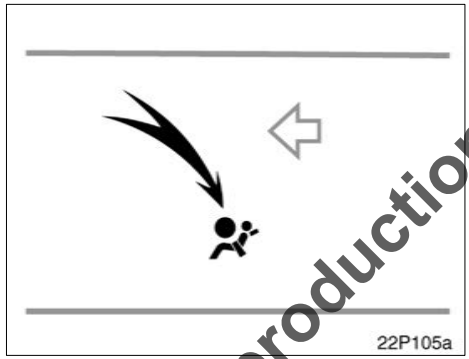

This indicator comes on when the "IG–ON" mode is enabled. It goes off after about 6 seconds. This means the SRS front airbags are operating properly.

The warning light system monitors the airbag sensor assembly, front airbag sensors, side and curtain shield airbag sensors, curtain shield airbag sensors, driver's seat position sensor, driver's seat belt buckle switch, seat belt pretensioner assemblies, interconnecting wiring and power sources. (For details, see "Service reminder indicators and warning buzzers" on page 107.)

If any of the following conditions occurs, this indicates a malfunction of the airbags or seat belt pretensioners. Contact your Toyota dealer as soon as possible.

- The light does not come on when the "IG–ON" mode is enabled or remains on for more than 6 seconds.
- The light comes on while driving.

Not For Reproduction

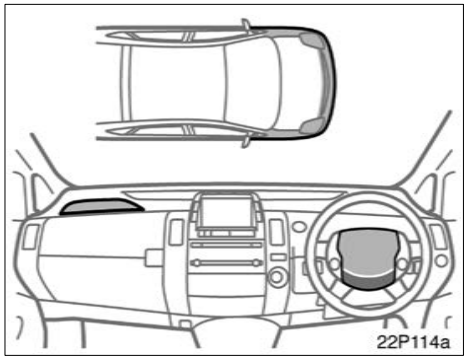

In the following cases, contact your Toyota dealer as soon as possible:

- The SRS front airbags have been inflated.
- The front of the vehicle (shaded in the illustration) was involved in an accident that was not severe enough to cause the SRS front airbags to inflate.
- The pad section of the steering wheel or front passenger airbag cover (shaded in the illustration) is scratched, cracked, or otherwise damaged.

NOTICE

Do not disconnect the 12 volt battery cables before contacting your Toyota dealer.

Not For Reproduction

—SRS side airbags and curtain shield airbags

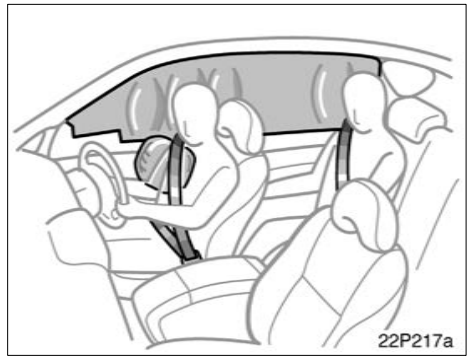

The SRS (Supplemental Restraint System) side airbags and curtain shield airbags are designed to provide further protection for the driver, front passenger and rear outboard passengers in addition to the primary safety protection provided by the seat belts.

In response to a severe side impact, the SRS side airbags and curtain shield airbags work with the seat belts to help reduce injury by inflating. The SRS side airbags help reduce injuries mainly to the driver's or front passenger's chest and the SRS curtain shield airbags help reduce injuries mainly to the driver's, front passenger's or rear outboard passenger's head.

The SRS side airbag and curtain shield airbag on the passenger side are activated even with no passenger in the front seat or rear outboard seat.

The SRS curtain shield airbags may activate even when the side airbags are not activated.

Always wear your seat belt properly.

⚠ CAUTION

- **The SRS side airbag and curtain shield airbag system is designed only as a supplement to the primary protection of the driver, front passenger and rear outside passenger seat belt systems. To ensure maximum protection in an accident, the driver and all passengers in the vehicle must wear their seat belts properly. Wearing a seat belt properly during an accident reduces the chances of death or serious injury or being thrown out of the vehicle. For instructions and precautions concerning the seat belt system, see "Seat belts" on page 52.**

Not For Reproduction

- **Do not allow anyone to lean his/her head or any part of his/her body against the door or the area of the seat, front pillar, rear pillar or roof side rail from which the SRS side airbag and curtain shield airbag deploy even if he/she is a child seated in the child restraint system. It is dangerous if the SRS side airbag and curtain shield airbag inflate, and the impact of the deploying airbag could cause death or serious injury to the occupant.**
- **Improperly seated and/or restrained infants and children can be killed or seriously injured by the deploying airbags. An infant or child who is too small to use a seat belt should be properly secured using a child restraint system. Toyota strongly recommends that all infants and children be placed in the rear seats of the vehicle and properly restrained. The rear seats are the safest for infants and children. For instructions concerning the installation of a child restraint system, see "Child restraint" on page 73.**

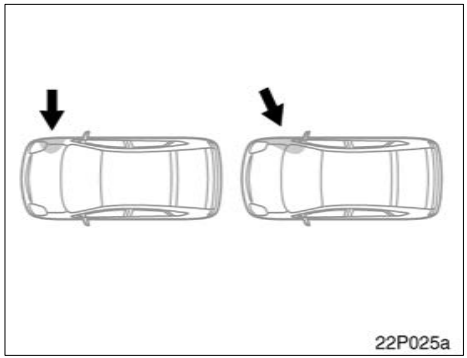

The SRS side airbag and curtain shield airbag system may not activate if the vehicle is subjected to a collision from the side at certain angles, or a collision to the side of the vehicle body other than the passenger compartment as shown in the illustration.

The SRS side airbags and curtain shield airbags are designed to inflate when the passenger compartment area suffers a severe impact from the side.

Always wear your seat belts properly.

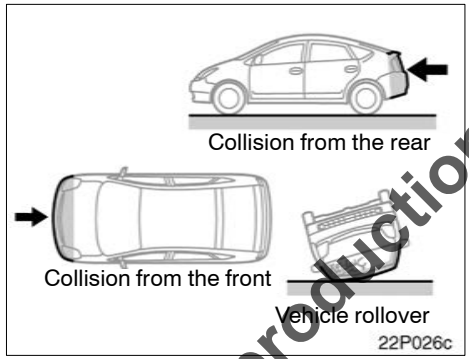

The SRS side airbags and curtain shield airbags are generally not designed to inflate if the vehicle is involved in a front or rear collision, if it rolls over, or if it is involved in a low–speed side collision.

Not For Reproduction

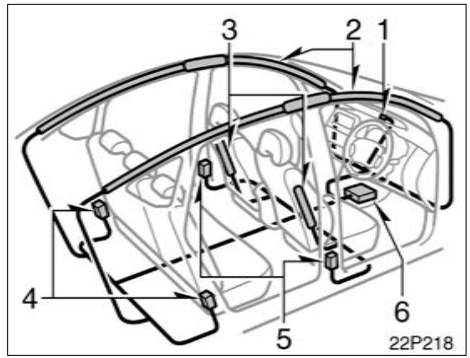

The SRS side airbag and curtain shield airbag system consists mainly of the following components, and their locations are shown in the illustration.

1. SRS warning light
2. Curtain shield airbag modules (airbag and inflator)
3. Side airbag modules (airbag and inflator)
4. Curtain shield airbag sensors
5. Side and curtain shield airbag sensors
6. Airbag sensor assembly

The SRS side airbag and curtain shield airbag system is controlled by the airbag sensor assembly. The airbag sensor assembly consists of a safing sensor and airbag sensor.

In a severe side impact, the side and curtain shield airbag sensor and/or the curtain shield airbag sensor trigger(s) the side airbag inflators and/or the curtain shield airbag inflators. At this time a chemical reaction in the inflators quickly fills the airbags with non–toxic gas to help restrain the lateral motion of the occupants.

When the airbags inflate, they produce a fairly loud noise and release some smoke and residue along with non–toxic gas. This does not indicate a fire. This smoke may remain inside the vehicle for some time, and may cause some minor irritation to the eyes, skin or breathing. Be sure to wash off any residue as soon as possible to prevent any potential skin irritation with soap and water. If you can safely exit from the vehicle, you should do so immediately.

Deployment of the airbags happen in a fraction of a second, so the airbags must inflate with considerable force. While the system is designed to reduce serious injuries, it may also cause minor burns or abrasions and swelling.

Front seats as well as parts of the front and rear pillars, and roof side rail may be hot for several minutes, but the airbags themselves will not be hot. The airbags are designed to inflate only once.

⚠ CAUTION

SRS side airbags and curtain shield airbags inflate with considerable force. To reduce the possibility of death or serious injury when they inflate, the driver, front passenger and rear outside passengers must:

- **Wear their seat belts properly.**
- **Remain properly seated with their backs upright and against the seats at all times.**

- **Do not allow anyone to lean against the door when the vehicle is in use, since the side airbag and curtain shield airbag could inflate with considerable speed and force. Otherwise, he/she may be killed or seriously injured. Special care should be taken especially when you have a small child in the vehicle.**
- **Sit up straight and well back in the seat, distributing your weight evenly in the seat. Do not apply excessive weight to the outer side of the seats with a side airbag, and to the front pillar, rear pillar and roof side rail with a curtain shield airbag.**

Not For Reproduction

- Do not allow anyone to kneel on the passenger seat, facing the passenger's side door, since the side airbag and curtain shield airbag could inflate with considerable speed and force. Otherwise, he/she may be killed or seriously injured. Special care should be taken especially when you have a small child in the vehicle.

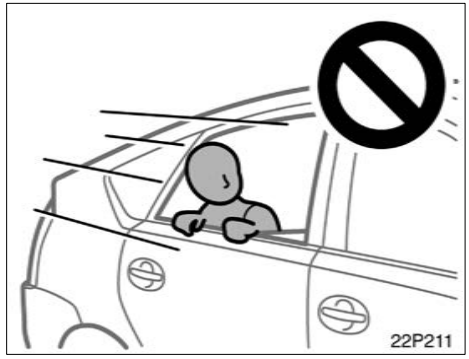

- Do not allow anyone to get his/her head closer to the area where the side airbag and curtain shield airbag inflate, since these airbags could inflate with considerable speed and force. Otherwise, he/she may be killed or seriously injured. Special care should be taken especially when you have a small child in the vehicle.

- Do not allow anyone to get his/her head or hands out of windows since the curtain shield airbags could inflate with considerable speed and force. Otherwise, he/she may be killed or seriously injured. Special care should be taken especially when you have a small child in the vehicle.

Not For Reproduction

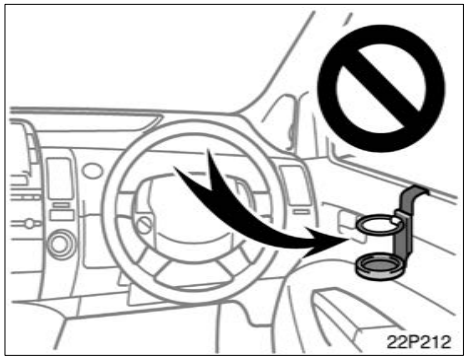

- **Do not attach a cup holder or any other device or object on or around the door. When the side airbag inflates, the cup holder or any other device or object will be thrown with great force or the side airbag may not activate correctly, resulting in death or serious injury. Likewise, the driver and front passenger should not hold objects in their arms or on their knees.**

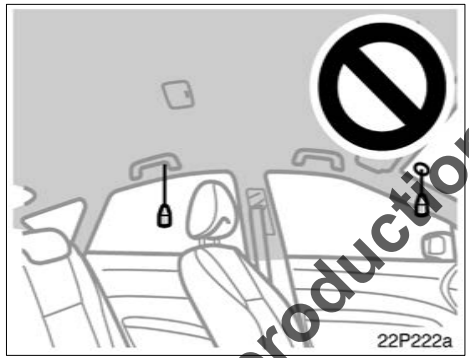

- **Do not attach a microphone or any other device or object around the area where the curtain shield airbag activates such as on the windshield glass, side door glass, front and rear pillars, roof side rail and assist grips. When the curtain shield airbag inflates, the microphone or other device or object will be thrown away with great force or the curtain shield airbag may not activate correctly, resulting in death or serious injury.**

- **Do not hook a hanger, heavy or sharp pointed objects on the coat hook. If the curtain shield airbag inflates, those items will be thrown away with great force or the curtain shield airbag may not activate correctly, resulting in death or serious injury. When you hang clothes, hang them on the coat hook directly.**
- **Do not use seat accessories which cover the parts where the side airbags inflate. Such accessories may prevent the side airbags from activating correctly, causing death or serious injury.**
- **Do not modify or replace the seats or upholstery of the seats with side airbags. Such changes may prevent the side airbag system from activating correctly, disable the system or cause the side airbags to inflate accidentally, resulting in death or serious injury.**

Not For Reproduction

- **Do not disassemble or repair the front and rear pillars and roof side rail containing the curtain shield airbags. Such changes may disable the system or cause the curtain shield airbags to inflate accidentally, resulting in death or serious injury.**

Failure to follow these instructions can result in death or serious injury. Consult your Toyota dealer about any repair and modification.

NOTICE

Do not perform any of the following changes without consulting your Toyota dealer. Such changes can interfere with proper operation of the SRS side airbag and curtain shield airbag system in some cases.

- ***Installation of electronic devices such as a mobile two-way radio, cassette tape player or compact disc player***
- ***Modification of the suspension system***
- ***Modification of the side structure of the passenger compartment***
- ***Repairs made on or near the console or front seat***

Not For Reproduction

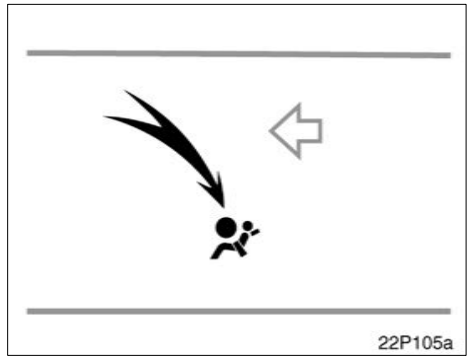

This indicator comes on when the "IG–ON" mode is enabled. It goes off after about 6 seconds. This means the SRS side airbags and curtain shield airbags are operating properly.

The warning light system monitors the airbag sensor assembly, front airbag sensors, side and curtain shield airbag sensors, curtain shield airbag sensors, driver's seat position sensor, driver's seat belt buckle switch, seat belt pretensioner assemblies, interconnecting wiring and power sources. (For details, see "Service reminder indicators and warning buzzers" on page 107.)

If any of the following conditions occurs, this indicates a malfunction of the airbags or seat belt pretensioners. Contact your Toyota dealer as soon as possible.

- The light does not come on when the “IG–ON” mode is enabled or remains on for more than 6 seconds.
- The light comes on while driving.

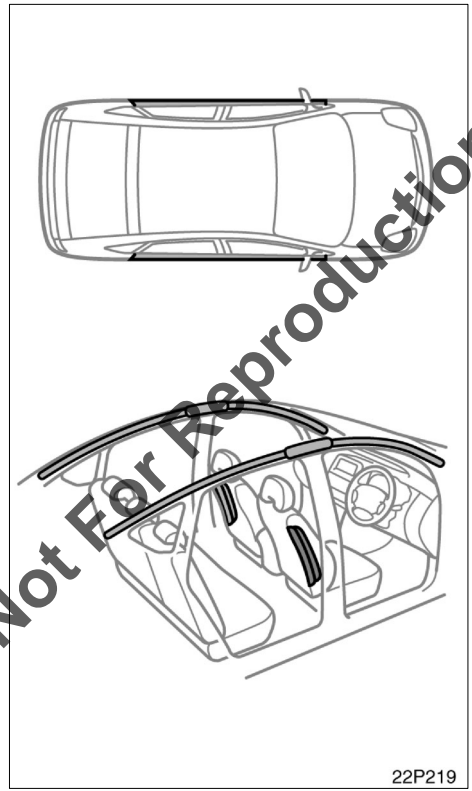

Not For Reproduction

In the following cases, contact your Toyota dealer as soon as possible:

- Any of the SRS side airbags and curtain shield airbags have been inflated.
- The portion of the doors (shaded in the illustration) were involved in an accident that was not severe enough to cause the SRS side airbags and curtain shield airbags to inflate.
- The surface of the seats with the side airbag (shaded in the illustration) is scratched, cracked, or otherwise damaged.
- The portion of the front pillars, rear pillars or roof side rail garnishes (padding) containing the curtain shield airbags inside (shaded in the illustration) is scratched, cracked, or otherwise damaged.

NOTICE
Do not disconnect the 12 volt battery cables before contacting your Toyota dealer.

Child restraint—
—Child restraint precautions

Toyota strongly urges the use of appropriate child restraint systems for children.

If a child is too large for a child restraint system, the child should sit in the rear seat and must be restrained using the vehicle's seat belt. See "Seat belts" on page 52 for details.

CAUTION

- **For effective protection in automobile accidents and sudden stops, a child must be properly restrained, using a seat belt or child restraint system depending on the age and size of the child. Holding a child in your arms is not a substitute for a child restraint system. In an accident, the child can be crushed against the windshield, or between you and the vehicle's interior.**
- **Toyota strongly urges use of a proper child restraint system which conforms to the size of the child, installed on the rear seat. According to accident statistics, the child is safer when properly restrained in the rear seat than in the front seat.**
- **Never install a rear–facing child restraint system on the front passenger seat. In the event of an accident, the force of the rapid inflation of the front passenger airbag can cause death or serious injury to the child if the rear-facing child restraint system is installed on the front passenger seat.**
- **A forward–facing child restraint system should be allowed to be installed on the front passenger seat only when it is unavoidable. Always move the seat as far back as possible, because the front passenger airbag could inflate with considerable speed and force. Otherwise, the child may be killed or seriously injured.**
- **On vehicles with side airbags and curtain shield airbags, do not allow the child to lean his/her head or any part of his/her body against the door or the area of the seat, front or rear pillar or roof side rail from which the side airbags or curtain shield airbags deploy even if the child is seated in the child restraint system. It is dangerous if the side airbag and curtain shield airbag inflate, and the impact could cause death or serious injury to the child.**
- **If child restraint system regulations exist in the country where you reside, please contact your Toyota dealer for the installation of the child restraint system in the front seat.**
- **Make sure you have complied with all installation instructions provided by the child restraint manufacturer and that the system is properly secured. If it is not secured properly, it may cause death or serious injury to the child in the event of a sudden stop or accident.**

Not For Reproduction

- **Do not allow children to play with the child restraint lock function belt. If the belt becomes twisted around a child's neck, it will not be possible to pull the belt out leading to choking or other serious injuries that could result in death.**
  If this occurs and the buckle cannot be unfastened, scissors should be used to cut the belt.

—Child restraint system

A child restraint system for a small child or baby must itself be properly restrained on the seat with the lap portion of the lap/shoulder belt. You must carefully consult the manufacturer's instructions which accompany child restraint system.

To provide proper restraint, use a child restraint system following the manufacturer's instructions about the appropriate age and size of the child for the child restraint system.

Install the child restraint system correctly following the instructions provided by its manufacturer. General directions are also provided under the following instructions.

The child restraint system should be installed on the rear seat. According to accident statistics, the child is safer when properly restrained in the rear seat than in the front seat.

Not For Reproduction

CAUTION

When the child restraint system is not in use:

- **Keep the child restraint system properly secured on the seat even if it is not in use. Do not store the restraint unsecured in the passenger compartment.**
- **If it is necessary to detach the child restraint system, remove it from the vehicle or store it securely in the luggage compartment.**

  This will prevent it from injuring passengers in the event of a sudden stop or accident.

Types of 3–point seat belts

There are two types of 3–point seat belt. Check the type before installing a child restraint system.

ALR/ELR (Automatic Locking Retractor/ Emergency Locking Retractor) belt—
This belt locks when the belt is pulled out quickly. Also, this belt has an additional fully–extended lock mode; When the shoulder belt is completely extended and is then retracted even slightly, the retractor locks the belt in that position and the belt cannot be extended. When installing a child restraint system, fully extend the belt to put it in the lock mode.

ALR/ELR belts are equipped for the rear seat belts.

ELR (Emergency Locking Retractor) belt—
This belt also locks when the belt is pulled out quickly but it does not have an additional fully–extended lock mode. When installing a child restraint system, you will need a locking clip.

If your child restraint system does not provide a locking clip, you can purchase the following item from your Toyota dealer.

Locking clip for child restraint system (Part No. 73119–22010)

—Types of child restraint system

Child restraint systems are classified into the following 3 types depending on the child's age and size.

(A) Baby (infant) seat
(B) Child (convertible) seat
(C) Junior (booster) seat

Install the child restraint system following the instructions provided by its manufacturer.

An ISOFIX Child Restraint System approved for your vehicle may also be used. See "—Installation with ISOFIX rigid anchor" on page 87.

Not For Reproduction

(A) Baby (infant) seat

(B) Child (convertible) seat

—Installation with 3–point type seat belt (ALR/ELR belt)

(C) Junior (booster) seat

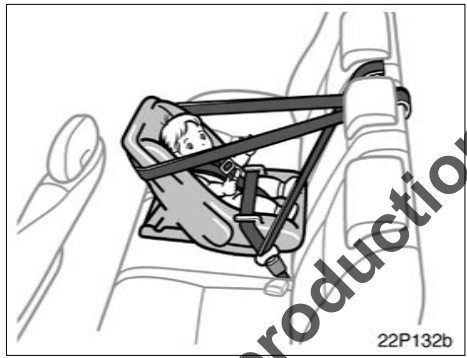

(A) BABY (INFANT) SEAT INSTALLATION

A baby (infant) seat must be used in rear–facing position only.

CAUTION

- Do not install a child restraint system on the rear seat if it interferes with the lock mechanism of the front seats. Otherwise, the child or front seat occupant(s) may be killed or seriously injured in case of sudden braking or a collision.
- If the driver's seat position does not allow sufficient space for safe installation, install the child restraint system on the rear left seat. Child restraint system installed on the rear seat should not contact the front seatbacks.

Not For Reproduction

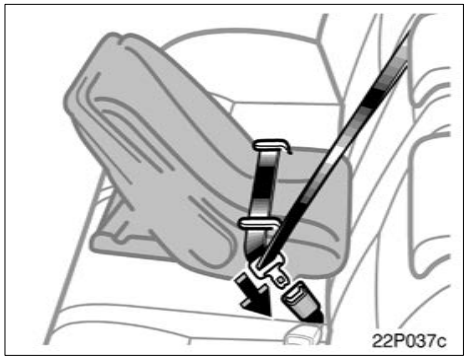

1. Run the lap and shoulder belt through or around the baby (infant) seat following the instructions provided by its manufacturer and insert the tab into the buckle taking care not to twist the belt. Keep the lap portion of the belt tight.

⚠ CAUTION

- **After inserting the tab, make sure the tab and buckle are locked and that the lap and shoulder portions of the belt are not twisted.**
- **Do not insert coins, clips, etc. in the buckle as this may prevent you from properly latching the tab and buckle.**
- **If the seat belt does not function normally, it cannot protect your child from death or serious injury. Contact your Toyota dealer immediately. Do not install the child restraint system on the seat until the seat belt is fixed.**

Not For Reproduction

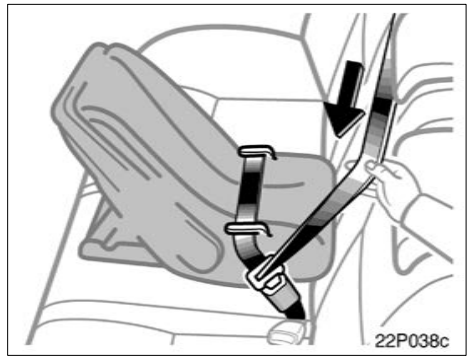

2. Fully extend the shoulder belt to put it in the lock mode. When the belt is then retracted slightly, it cannot be extended.

To hold the baby (infant) seat securely, make sure the belt is in the lock mode before letting the belt retract.

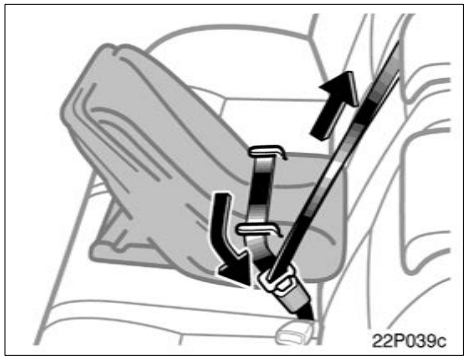

3. While pressing the baby (infant) seat firmly against the seat cushion and seatback, let the shoulder belt retract as far as it will go to hold the baby (infant) seat securely.

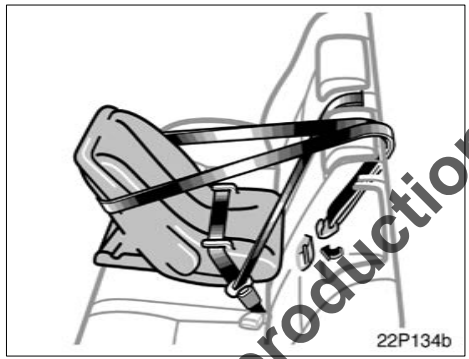

4. Attach the child restraint attaching clip to the child restraint anchor fitting. Make sure the clip is securely attached and tighten the upper anchorage strap. See "Child restraint anchor fittings" on page 86.

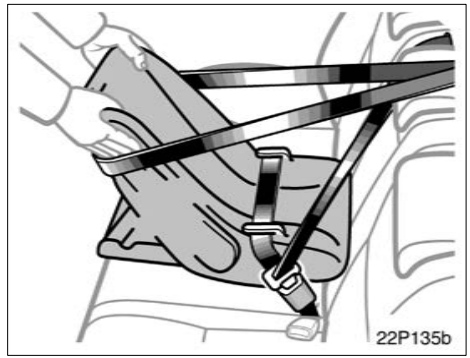

CAUTION

Push and pull the child restraint system in different directions to be sure it is secure. Follow all the installation instructions provided by its manufacturer.

Not For Reproduction

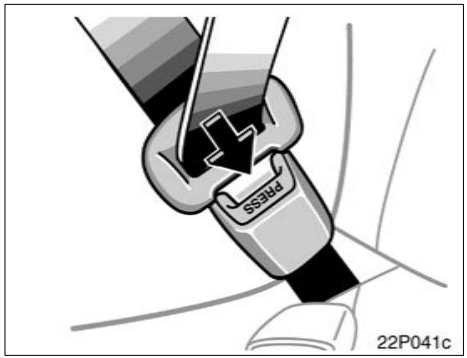

5. To remove the baby (infant) seat, press the buckle release button and allow the belt to retract completely. The belt will move freely again and be ready to work for an adult or older child passenger. Unhook the child restraint attaching clip from the child restraint anchor fitting.

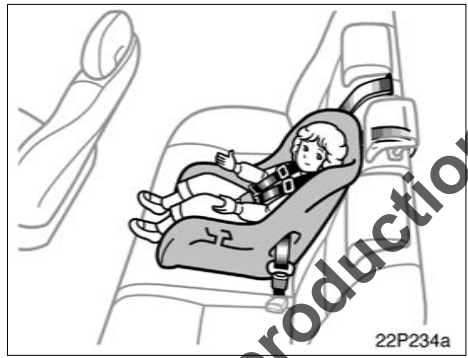

(B) CHILD (CONVERTIBLE) SEAT INSTALLATION

A child (convertible) seat must be used in forward–facing or rear–facing position depending on the age and size of the child. When installing, follow the manufacturer's instructions about the applicable age and size of the child as well as directions for installing the child restraint system.

Not For Reproduction

⚠ CAUTION

- **Do not install a child restraint system on the rear seat if it interferes with the lock mechanism of the front seats. Otherwise, the child or front seat occupant(s) may be killed or seriously injured in case of sudden braking or a collision.**
- **If the driver's seat position does not allow sufficient space for safe installation, install the child restraint system on the rear left seat. Child restraint system installed on the rear seat should not contact the front seatbacks.**

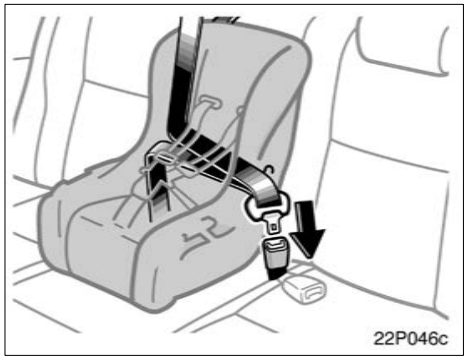

1. Run the lap and shoulder belt through or around the child (convertible) seat following the instructions provided by its manufacturer and insert the tab into the buckle taking care not to twist the belt. Keep the lap portion of the belt tight.

⚠ CAUTION

- **After inserting the tab, make sure the tab and buckle are locked and that the lap and shoulder portions of the belt are not twisted.**
- **Do not insert coins, clips, etc. in the buckle as this may prevent you from properly latching the tab and buckle.**
- **If the seat belt does not function normally, it cannot protect your child from death or serious injury. Contact your Toyota dealer immediately. Do not install the child restraint system on the seat until the seat belt is fixed.**

Not For Reproduction

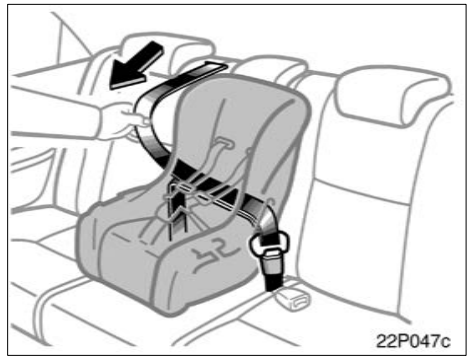

2. Fully extend the shoulder belt to put it in the lock mode. When the belt is then retracted even slightly, it cannot be extended.

To hold the child (convertible) seat securely, make sure the belt is in the lock mode before letting the belt retract.

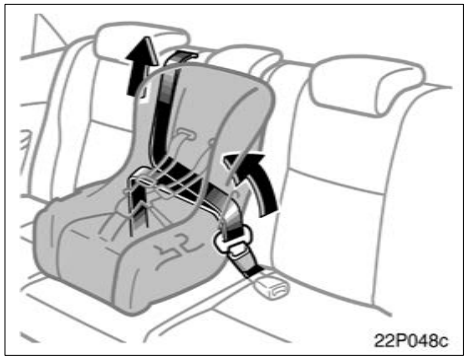

3. While pressing the child (convertible) seat firmly against the seat cushion and seatback, let the shoulder belt retract as far as it will go to hold the child (convertible) seat securely.

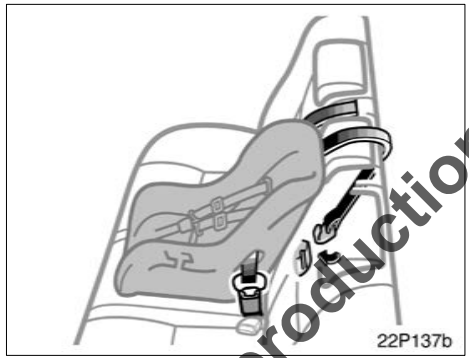

4. Attach the child restraint attaching clip to the child restraint anchor fitting. Make sure the clip is securely attached and tighten the upper anchorage strap. See "Child restraint anchor fittings" on page 86.

⚠ CAUTION

Push and pull the child restraint system in different directions to be sure it is secure. Follow all the installation instructions provided by its manufacturer.

Not For Reproduction

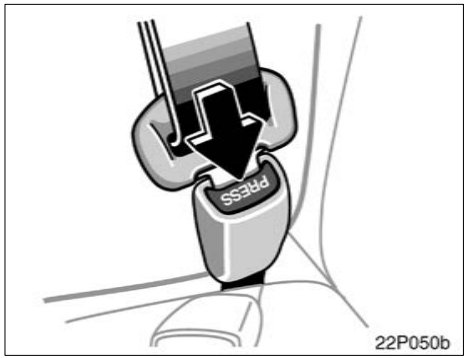

5. To remove the child (convertible) seat, press the buckle release button and allow the belt to retract completely. The belt will move freely again and be ready to work for an adult or older child passenger. Unhook the child restraint attaching clip from the child restraint anchor fitting.

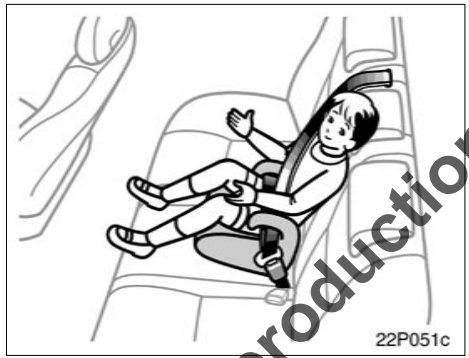

(C) JUNIOR (BOOSTER) SEAT INSTALLATION

A junior (booster) seat must be used in forward–facing position only.

1. Sit the child on a junior (booster) seat. Run the lap and shoulder belt through or around the junior (booster) seat and across the child following the instructions provided by its manufacturer and insert the tab into the buckle taking care not to twist the belt.

Make sure the shoulder belt is correctly across the child's shoulder and that the lap belt is positioned as low as possible on the child's hips. See "Seat belts" on page 52 for details.

Not For Reproduction

⚠ CAUTION

- **Always make sure the shoulder belt is positioned across the center of child's shoulder. The belt should be kept away from child's neck, but not falling off child's shoulder. Otherwise, the child may be killed or seriously injured in case of sudden braking or a collision.**
- **Both high–positioned lap belts and loose–fitting belts could cause death or serious injuries due to sliding under the lap belt during a collision or other unintended event. Keep the lap belt positioned as low on a child's hips as possible.**
- **For child's safety, do not place the shoulder belt under child's arm.**
- **After inserting the tab, make sure the tab and buckle are locked and that the lap and shoulder portions of the belt are not twisted.**
- **Do not insert coins, clips, etc. in the buckle as this may prevent you from properly latching the tab and buckle.**

- **If the seat belt does not function normally, it cannot protect your child from death or serious injury. Contact your Toyota dealer immediately. Do not install the child restraint system on the seat until the seat belt is fixed.**

Not For Reproduction

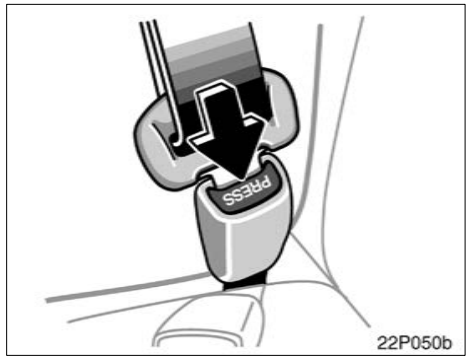

2. To remove the junior (booster) seat, press the buckle release button and allow the belt to retract.

—Installation with 3–point type seat belt (ELR belt)

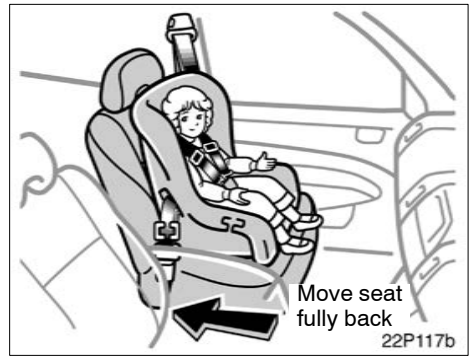

When installing a child restraint system, follow the instructions provided by its manufacturer.

Depending on the type of your child restraint system, you will need a locking clip to install a child restraint system properly.

If your child restraint system does not provide a locking clip, you can purchase one at your Toyota dealer. (See "—Child restraint system" on page 74.)

⚠ CAUTION

- **Extreme Hazard! Do not use a rearward facing child restraint on a seat protected by an airbag in front of it! This is because the force of the rapid inflation of the front passenger airbag can cause death or serious injury to the child. Vehicles with the front passenger airbag display a warning label on the passenger side instrument panel as shown above to remind you not to put a rear–facing child restraint system on the front passenger seat at any time.**

- **A forward–facing child restraint system should be allowed to be installed on the front passenger seat only when it is unavoidable. Always move the seat as far back as possible, because the front passenger airbag could inflate with considerable speed and force. Otherwise, the child may be killed or seriously injured.**

Not For Reproduction

- On vehicles with side airbags and curtain shield airbags, do not allow the child to lean his/her head or any part of his/her body against the door or the area of the seat, front or rear pillar or roof side rail from which the side airbags or curtain shield airbags deploy even if the child is seated in the child restraint system. It is dangerous if the side airbag and curtain shield airbag inflate, and the impact could cause death or serious injury to the child.
- If child restraint system regulations exist in the country where you reside, please contact your Toyota dealer for the installation of the child restraint system in the front seat.

- After inserting the tab, make sure the tab and buckle are locked and that the lap and shoulder portions of the belt are not twisted.
- Do not insert coins, clips, etc. in the buckle as this may prevent you from properly latching the tab and buckle.
- If the seat belt does not function normally, it cannot protect your child from death or serious injury. Contact your Toyota dealer immediately. Do not install the child restraint system on the seat until the seat belt is fixed.

Not For Reproduction

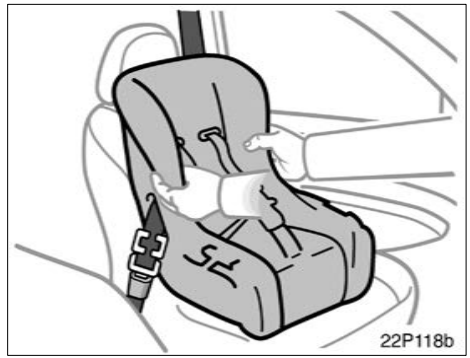

- Push and pull the child restraint system in different directions to be sure it is secure. Follow all the installation instructions provided by its manufacturer.

—Child restraint anchor fittings

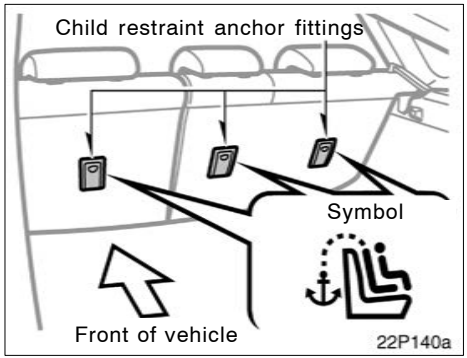

For easy installation of child restraints, your vehicle has three child restraint anchor fittings on the back of the rear seatback.

When installing a child restraint, follow both the instructions here and those provided by the manufacturer of your child restraint.

To use the child restraint anchor fittings, remove the luggage cover (See “Luggage cover” on page 209.) and raise the head restraint to the uppermost lock position.

⚠ CAUTION

WARNING: child restraint anchorages are designed to withstand only those loads imposed by correctly fitted child restraints. Under no circumstances are they to be used for adult seat belts, harnesses or for attaching other items or equipment to the vehicle.

Not For Reproduction

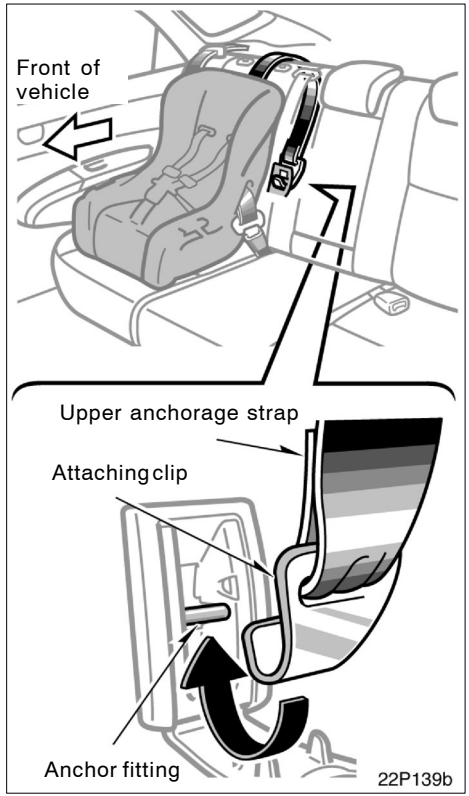

ATTACHMENT OF THE ATTACHING CLIP

Open the cover of the child restraint anchor fitting and attach the child restraint attaching clip to the child restraint anchor fitting. Make sure the clip is securely attached and tighten the upper anchorage strap.

⚠ CAUTION

Make sure the seat belt is securely locked, and check that the child restraint system is secured by pushing and pulling it in different directions. Follow all the installation instructions provided by its manufacturer.

—Installation with ISOFIX rigid anchor (ISOFIX child restraint system)

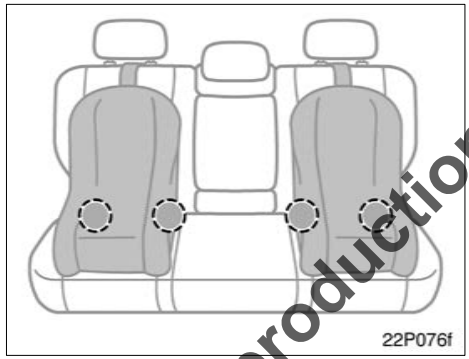

The exclusive fixing bar for the child restraint system interfaced with the ISO specification is equipped on the rear seat.

The bar of about 6 mm (0.2 in.) diameter is installed in the clearance between the seat cushion and seatback of both outside rear seats.

Child restraint system interfaced with a quasi–ISO specification can be fixed with this exclusive bar. In this case, it is not necessary to fix the child restraint system with a seat belt on the vehicle.

NOTICE

Ask the manufacturer of child restraint system if the child restraint system is approved for this model.

Not For Reproduction

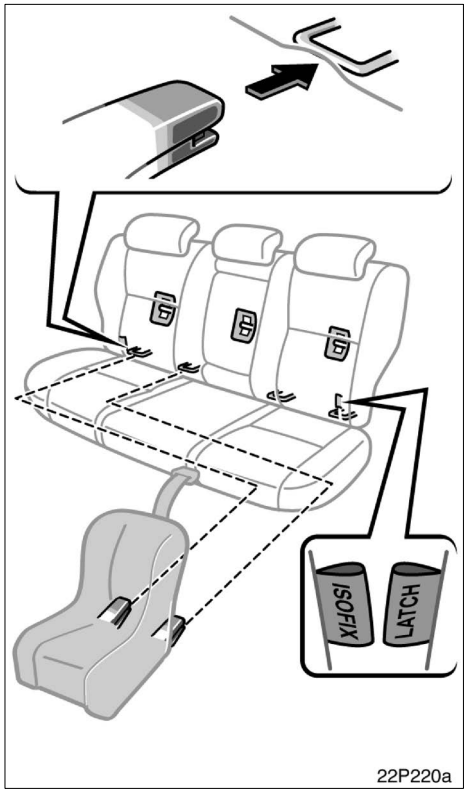

CHILD RESTRAINT SYSTEM INSTALLATION

1. **Widen the gap between the seat cushion and seatback slightly and confirm the position of the exclusive fixing bars below the tag in the seatback.**
2. **Latch the buckles onto the anchorages.**

If your child restraint system has a top strap, it should be anchored. (For the installation of the top strap, see "—Child restraint anchor fittings" on page 86.)

For installation details, refer to the instruction manual equipped with each product.

Not For Reproduction

CAUTION

- **When using the exclusive fixing bar for the child restraint system, be sure that there is no irregular objects around the bar or that the seat belt is not caught.**
- **Push and pull the child restraint system in different directions to be sure it is secure. Follow all the installation instructions provided by its manufacturer.**
- **Do not install a child restraint system on the rear seat if it interferes with the lock mechanism of the front seats. Otherwise, the child or front seat occupant(s) may be killed or seriously injured in case of sudden braking or a collision.**

OPERATION OF INSTRUMENTS AND CONTROLS

Steering wheel and Mirrors

Tilt steering wheel 90
Outside rear view mirrors 90
Anti–glare inside rear view mirror 92
Vanity mirrors 93

Not For Reproduction

Tilt steering wheel

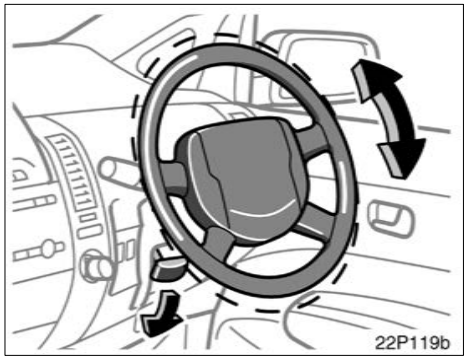

To change the steering wheel angle, hold the steering wheel, push down the lock release lever, tilt the steering wheel to the desired angle and push the lever up to lock the steering wheel in position.

⚠ CAUTION

- **Do not adjust the steering wheel while the vehicle is moving. Doing so may cause the driver to mishandle the vehicle and an accident may occur resulting in death or serious injuries.**
- **After adjusting the steering wheel, try moving it up and down to make sure it is locked in position.**

When you move the steering wheel, an electrical motor noise may be heard. This is the power steering motor noise, and is not a malfunction.

Not For Reproduction

Outside rear view mirrors—

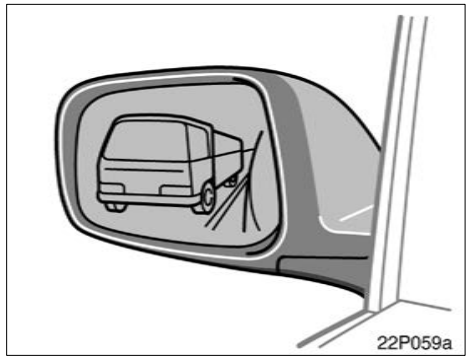

Adjust the mirror so that you can just see the side of your vehicle in the mirror.

Be careful when judging the size or distance of any object seen in the outside rear view mirror on the passenger's side because it is a convex mirror. Any object seen in a convex mirror will look smaller and farther away than when seen in a flat mirror.

—Power rear view mirror control

⚠ CAUTION

Do not adjust the mirror while the vehicle is moving. Doing so may cause the driver to mishandle the vehicle and an accident may occur resulting in death or serious injuries.

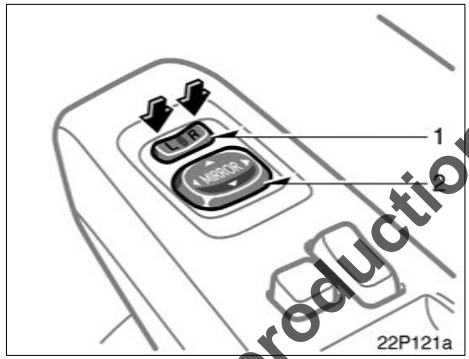

To adjust a mirror, use the switches.

1. Master switch—To select the mirror to be adjusted
   Push the switch to “L” (left) or “R” (right).
2. Control switch—To move the mirror
   Push the switch in the desired direction.

The mirrors can be adjusted when the hybrid system is in “ACC” or “IG–ON”.

NOTICE

If ice should jam the mirror, do not operate the control or scrape the mirror face. Use a spray de–icer to free the mirror.

Not For Reproduction

—Folding rear view mirrors

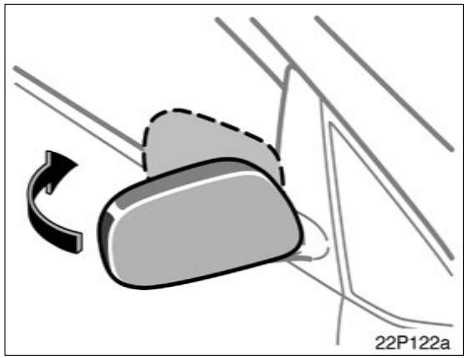

The rear view mirrors can be folded backward for parking in compact areas.

To fold the rear view mirror, push backward.

⚠ CAUTION

Do not drive with the mirrors folded backward. Both the driver and passenger side rear view mirrors must be extended and properly adjusted before driving.

Anti-glare inside rear view mirror

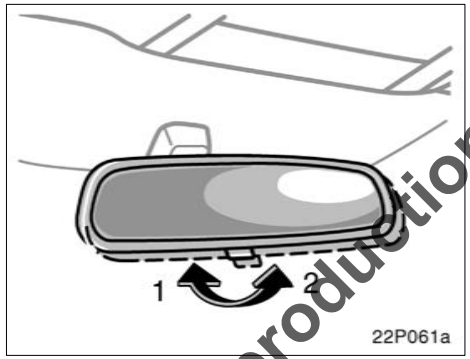

Adjust the mirror so that you can just see the rear of your vehicle in the mirror.

To reduce glare from the headlights of the vehicle behind you during night driving, operate the lever on the lower edge of the mirror.

Daylight driving—Lever at position 1

The reflection in the mirror has greater clarity at this position.

Night driving—Lever at position 2

Remember that by reducing glare you also lose some rear view clarity.

⚠ CAUTION

Do not adjust the mirror while the vehicle is moving. Doing so may cause the driver to mishandle the vehicle and an accident may occur resulting in death or serious injuries.

Not For Reproduction

Vanity mirror

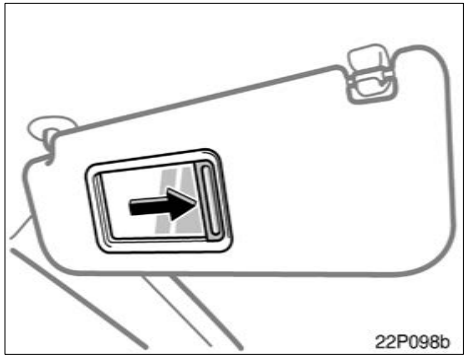

To use the vanity mirror, swing down the sun visor and slide the cover.

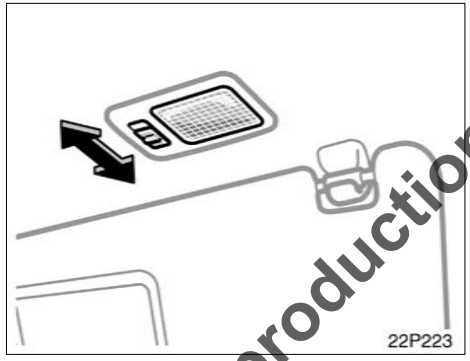

To turn on the vanity light, slide the switch.

The vanity light switch has the following positions:

"ON"—Turns the light on when you swing down the sun visor. However, if the visor has been slid out, the light may not come on.

"OFF"—Turns the light off.

Not For Reproduction

Not For Reproduction

OPERATION OF INSTRUMENTS AND CONTROLS

Lights, Wipers and Defogger

Headlights and turn signals 96
Emergency flashers 97
Front fog lights 98
Interior light 98
Personal light 99
Luggage compartment light 99
Key slot lights 100
Windshield wipers and washer 100
Rear window wiper and washer 101
Rear window defogger 101

Not For Reproduction

Headlights and turn signals

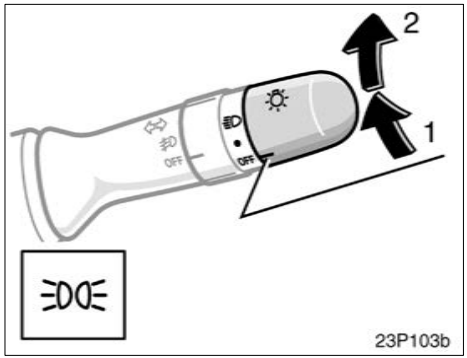

HEADLIGHTS

To turn on the following lights: Twist the headlight/turn signal lever knob.

Position 1—Parking, tail, license plate and instrument panel lights

Position 2—Headlights and all of the above

Automatic light cut off system

The lights automatically turn off when the driver's door is opened with the hybrid system off. To turn them on again, press the "POWER" switch twice from the off setting to select the "IG–ON" mode without depressing the brake pedal or actuate the headlight switch. If you are going to park for over one week, make sure the headlight switch is off.

When the headlight switch is turned to the first or second clickstop, the brightness of the instrument cluster will be reduced slightly unless the extinction canceling button is on.

NOTICE
To prevent the battery from being discharged, do not leave the lights on longer than necessary when the hybrid system is not running.

Not For Reproduction

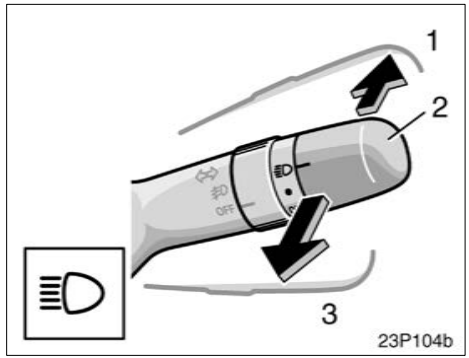

High–Low beams—For high beams, turn the headlights on and push the lever away from you (position 1). Pull the lever toward you (position 2) for low beams.

The headlight high beam indicator light (blue light) on the instrument panel will tell you that the high beams are on.

Flashing the high beam headlights (position 3)—Pull the lever all the way back. The high beam headlights turn off when you release the lever.

The high beam flasher works even when the headlight switch is off.

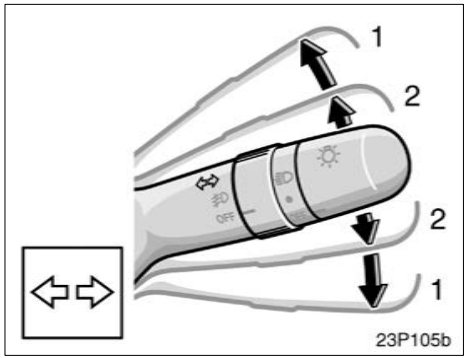

TURN SIGNALS

To signal a turn, push the headlight/ turn signal lever up or down to position 1.

The hybrid system must be in the “IG–ON” mode.

The lever automatically returns after you make a turn, but you may have to return it by hand after you change lanes.

To signal a lane change, move the lever up or down to the pressure point (position 2) and hold it.

If the turn signal indicator lights (green lights) on the instrument panel flash faster than normal, a front or rear turn signal bulb is burned out. See “Replacing light bulbs—” on page 288.

Not For Reproduction

Emergency flashers

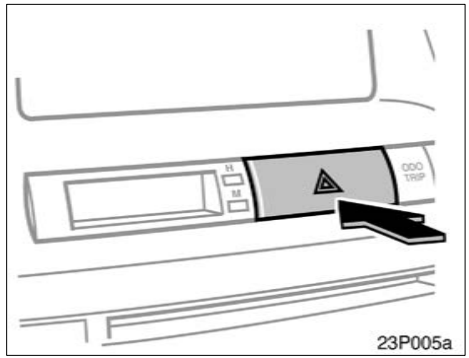

To turn on the emergency flashers, push the switch.

All the turn signal lights will flash. To turn them off, push the switch once again.

Turn on the emergency flashers to warn other drivers if your vehicle must be stopped where it might be a traffic hazard.

Always pull as far off the road as possible.

The turn signal light switch will not work when the emergency flashers are operating.

NOTICE

To prevent the battery from being discharged, do not leave the switch on longer than necessary when the hybrid system is not running.

Front fog lights

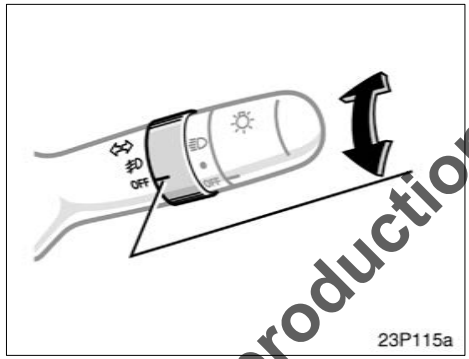

To turn on the fog lights, twist the band of the headlight switch lever to the position of the fog light. The fog lights come on only when the headlights are on low beam.

The band automatically returns to the "OFF" position after you release it.

Interior lights

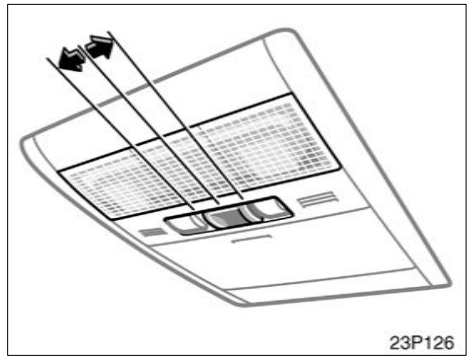

Front

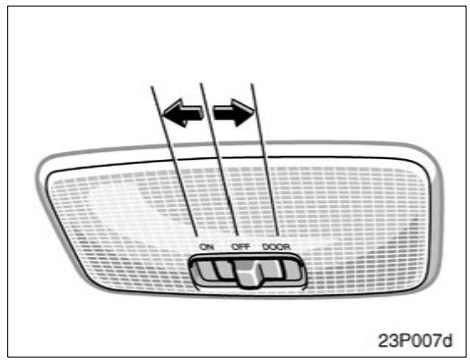

Rear

Not For Reproduction

To turn on the interior light, slide the switch.

The interior light switch has the following positions:

“ON”—Keeps the light on all the time.

“OFF”—Turns the light off.

“DOOR”—Turns the light on when any door is opened. The light remains on for 15 seconds when all the doors are closed.

ILLUMINATED ENTRY SYSTEM

With the switch in “DOOR” position, the light comes on when any of the doors is opened or when you get close to the front door, carrying the smart key. After all the doors are closed, the light remains on for about 15 seconds and then fades out.

However, in the following cases, the light goes off immediately.

- All the doors are closed when the hybrid system is in “ACC” or “IG–ON”.
- All the doors are closed and locked.

When all the doors are unlocked, the light comes on for about 15 seconds and then fades out, even if the door is not opened.

Personal light

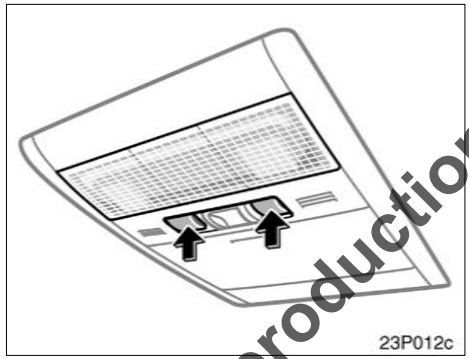

To turn on the personal light, push the switch. To turn it off, push the switch again.

Luggage compartment light

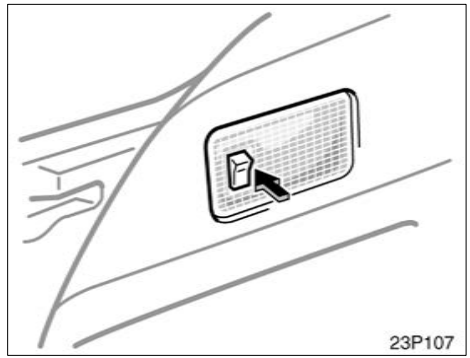

To turn on the luggage compartment light, push the switch upwards. To turn it off, push the switch downwards.

The light is located on the left side of the luggage compartment.

Even if you push the switch upwards, the light turns off automatically when you close the back door.

Not For Reproduction

Key slot lights

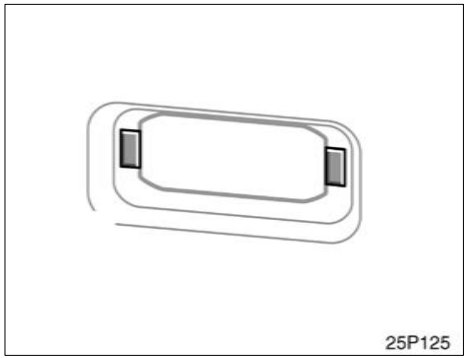

For easy access to the key slot, the key slot lights come on while the interior light is on.

Windshield wipers and washer

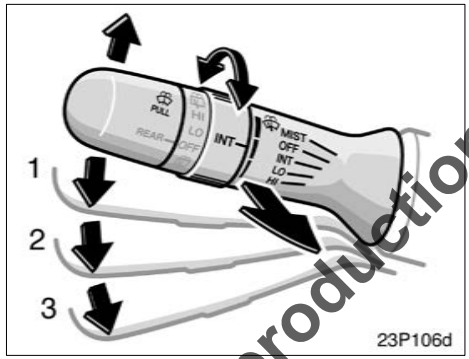

To turn on the windshield wipers, move the lever to the desired setting.

The hybrid system must be in the "IG–ON" mode.

Lever position	Speed setting
Position 1	Intermittent
Position 2	Slow
Position 3	Fast

For a single sweep of the windshield, push the lever up and release it.

Twist the interval adjuster upward to increase the wiping time interval between sweeps, and downward to decrease it.

The wiper lever must be in the "INT" position.

To squirt washer fluid, pull the lever toward you and release it.

If the windshield wipers are off, they will operate a couple of times after the washer squirts.

For instructions on adding washer fluid, see "Adding washer fluid" on page 287.

In freezing weather, warm the windshield with the defroster before using the washer. This will help prevent the washer fluid from freezing on your windshield, which can block your vision.

NOTICE
Do not operate the wipers if the windshield is dry. It may scratch the glass.

Not For Reproduction

Rear window wiper and washer

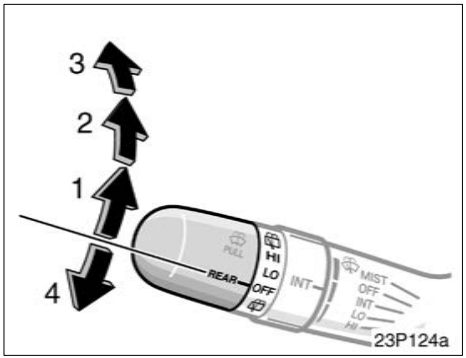

To turn on the rear window wiper, twist the lever knob upward.

The hybrid system must be in the “IG–ON” mode.

Lever position	Speed setting
Position 1	Intermittent
Position 2	Normal

To squirt washer fluid on the rear window, twist the knob upward or downward as far as it will go (position 3 or 4). The knob automatically returns from these positions after you release it. The rear window wiper operates while the washer squirts.

For instructions on adding washer fluid, see “Adding washer fluid” on page 287.

NOTICE
Do not operate the rear wiper if the rear window is dry. It may scratch the glass.

Not For Reproduction

Rear window defogger

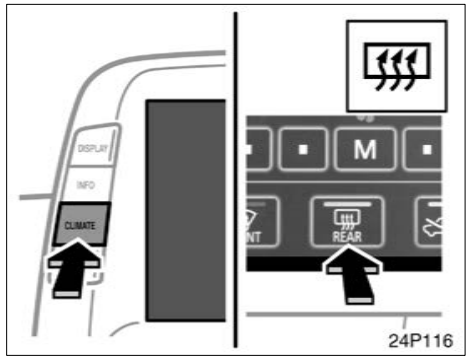

Type 1

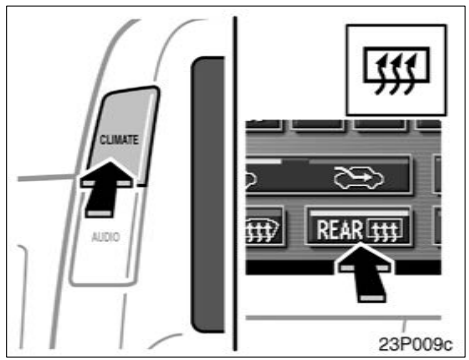

Type 2

To defog or defrost the rear window, push the "CLIMATE" button to display air conditioner screen and touch the switch.

Operating the steering switch can also defog or defrost the rear window. (See "Climate remote control" on page 194.)

The hybrid system must be in the "IG–ON" mode.

The thin heater wires on the inside of the rear window will quickly clear the surface. An indicator will come on to indicate the defogger is operating.

Touch the switch once again to turn the defogger off.

The system will automatically shut off after the defogger has operated about 15 minutes.

Make sure you turn the defogger off when the window is clear. Leaving the defogger on for a long time could cause the 12 volt battery to discharge. The defogger is not designed for drying rain water or for melting snow.

NOTICE
When cleaning the inside of the rear window, be careful not to scratch or damage the heater wires or connectors.

Not For Reproduction

SECTION 2 – 5

OPERATION OF INSTRUMENTS AND CONTROLS

Gauges, Meters and Service reminder indicators

Fuel gauge 104
Odometer and two trip meters 105
Instrument panel light control button 106
Service reminder indicators and warning buzzers 107

Not For Reproduction

Fuel gauge

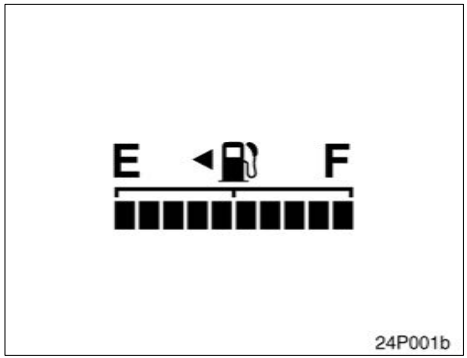

The gauge indicates the approximate quantity of fuel remaining in the tank when the "IG–ON" mode is enabled.

Nearly full–Indicator at "F"
Nearly empty–Indicator at "E"

It is a good idea to keep the tank over 1/4 full.

If the fuel gauge display flashes or the remaining quantity is not displayed after the flashing, there may be a problem in the system. In these cases, contact your Toyota dealer as soon as possible.

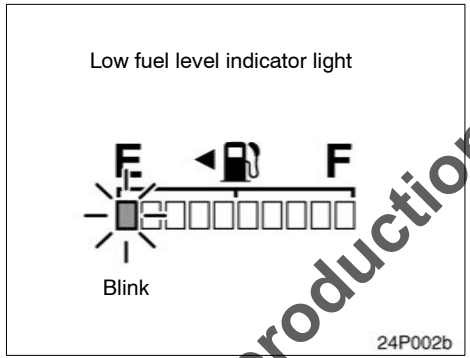

If the fuel level approaches "E" or the low fuel level indicator light blinks, fill the fuel tank as soon as possible.

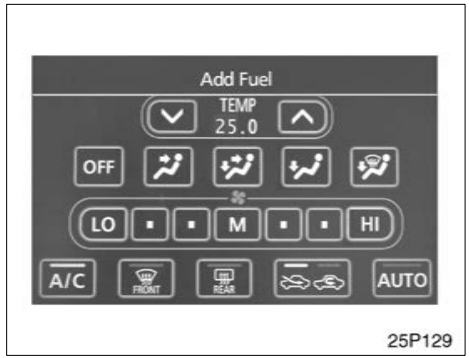

Type 1

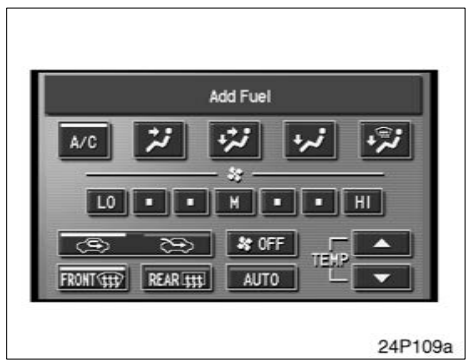

Type 2

Not For Reproduction

At the first blinking of the light, the master warning light in the instrument cluster comes on and the message appears on the multi–information display to remind the driver to fill fuel.

Odometer and two trip meters

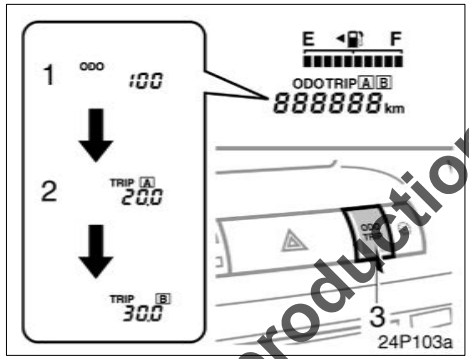

This meter displays the odometer and two trip meters.

1. Odometer—Shows the total distance the vehicle has been driven.
2. Two trip meters—Show two different distances independently driven since the last time each trip meter was set to zero.

   You can use one trip meter to calculate the fuel economy and the other to measure the distance on each trip. All trip meter data is cancelled if the electrical power source is disconnected.
3. Trip meter reset button—Resets the two trip meters to zero, and also change the meter display.

   To change the meter display, quickly push and release the button. The meter display changes in the order from the odometer to trip meter A to trip meter B, then back to the odometer each time you push.

   To reset the trip meter A to zero, display the meter A reading, then push and hold the button until the meter is set to zero. The same process can be applied for resetting the trip meter B.

Not For Reproduction

Instrument panel light control button

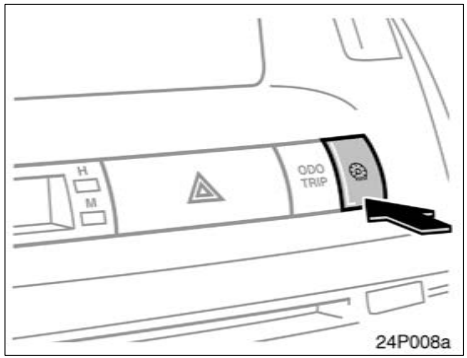

When you push the button with the tail lights on, you can cancel the reduced brightness in the instrument panel. To turn on this function, push the button again.

Not For Reproduction

Service reminder indicators and warning buzzers—
—Instrument cluster

If the indicator or buzzer comes on...		Do this.
(a)	(indicators and buzzer)	If parking brake is off, stop immediately and contact Toyota dealer. (in red) Take vehicle to Toyota dealer. (in yellow)
(b)	(indicator and buzzer)	Fasten driver's seat belt.
(c)	PASSENGER (indicator and buzzer)	Fasten front passenger's seat belt.
(d)		Take vehicle to Toyota dealer.
(e)		See multi–information display.
(f)	ABS	Take vehicle to Toyota dealer. If red brake system warning light is also on, stop immediately and contact Toyota dealer.

If any warning comes on, the hybrid system may not start by pushing the "POWER" switch. In that case, push it once again.

Not For Reproduction

If the indicator or buzzer comes on...		Do this.
(g)		Take vehicle to Toyota dealer immediately.
(h)		Close all doors.
(i)	E F	Fill up tank.
(j)	VSC	Take vehicle to Toyota dealer. If red brake system warning light is also on, stop immediately and contact Toyota dealer.
(k)	Key reminder buzzer	Remove key.
(l)	P position reminder buzzer	Push the “P” position switch.

Not For Reproduction

If any warning comes on, the hybrid system may not start by pushing the “POWER” switch. In that case, push it once again.

(a) Brake System Warning Lights and Buzzer

These lights come on in the following cases when the “IG–ON” mode is enabled.

RED WARNING LIGHT

- **When the parking brake is applied...**

This light comes on when the “IG–ON” mode is enabled, even after the parking brake is released.

If the vehicle speed rises above 5 km/h (3 mph) while the parking brake is applied, a buzzer sounds.

- **When the brake fluid level is low...**

CAUTION

It is dangerous to continue driving normally when the brake fluid level is low.

YELLOW WARNING LIGHT

- **When the regenerative brake system is fails...**

RED OR YELLOW WARNING LIGHT

- **When the hydraulic brake system fails...**

When the yellow warning light comes on, it is no problem to continue driving. However, if the red warning light comes on, it indicates a serious problem and you can continue driving no longer.

Have your vehicle checked at your Toyota dealer in the following cases:

- The lights do not come on even if the parking brake is applied when the “READY” light is on.
- The lights do not come on even if the “POWER” switch is pressed with the parking brake released.

A red or yellow warning light turning on briefly during operation does not indicate a problem.

Not For Reproduction

CAUTION

If any of the following conditions occurs, immediately stop your vehicle at a safe place and contact your Toyota dealer.

- **The red warning light does not turn off even after the parking brake is released while the hybrid system is running.**
- **The red warning light comes on or buzzer sounds continuously.**

In either case, this can indicate that the brakes may not work properly and your stopping distance will become longer. Depress the brake pedal firmly and bring the vehicle to an immediate stop.

- **The brake system warning light remains on together with the “ABS” and “VSC” warning light.**

In this case, not only the anti–lock brake system and vehicle stability control system will fail but also the vehicle will become extremely unstable during braking.

In the following case, drive directly to the nearest Toyota dealer.

- **The yellow warning light comes on while driving.**

Any of the following conditions may occur, but do not indicate the malfunction:

- The red and yellow warning light may stay on for about 60 seconds after the hybrid system is started. It is normal if it turns off after a while.
- Depressing the brake pedal repeatedly may turn on the red and yellow warning light and buzzer. It is normal if the light turns off and the buzzer stops sounding after a few seconds.
- You may hear a small sound in the engine compartment after the hybrid system is started or the brake pedal is depressed repeatedly. This is a pump pulsating sound of the brake system, and it is not a malfunction.
- You may hear a motor sound in the engine compartment when the brake pedal is depressed with the hybrid system off.
- The brake pedal stroke may be short when you press the "POWER" switch with the brake pedal depressed.
- You may hear a sound in the engine compartment when the driver's door is opened or the brake pedal is depressed with the hybrid system turned off. However, this does not indicate any trouble.
- You may hear a sound in the engine compartment after the hybrid system is turned on or off. However, this does not indicate any trouble.

(b) Driver's Seat Belt Reminder Light and Buzzer

The light and buzzer act as a reminder to buckle up the driver's seat belt.

Once the "IG–ON" mode is enabled, the reminder light flashes if the driver's seat belt is not fastened. Unless the driver fastens the belt, the light continues flashing.

If the vehicle speed rises above 20 km/h (12 mph) without the belt fastened, a buzzer sounds. To stop the buzzer, fasten the seat belt. If the buzzer still sounds, make sure the front passenger's seat belt is fastened.

(c) Front Passenger Seat Belt Reminder Light and Buzzer

The light and buzzer act as a reminder to have the front passenger buckle up the seat belt.

Once the "IG–ON" mode is enabled, the reminder light flashes if a front passenger sits in the front passenger seat and does not fasten the seat belt. Unless the front passenger fastens the belt, the light continues flashing.

If the vehicle speed rises above 20 km/h (12 mph) without the belt fastened, a buzzer sounds. To stop the buzzer, fasten the seat belt. If the buzzer still sounds, make sure the driver's seat belt is fastened.

If luggage load is placed on the front passenger seat, depending on its weight and how it is placed on the seat, built–in sensors in the seat cushion may detect the pressure, causing the reminder light to flash and buzzer to sound.

Not For Reproduction

(d) Malfunction Indicator Lamp

This lamp warns that there is a problem somewhere in your engine, hybrid system or throttle control system.

If it comes on while you are driving, have your vehicle checked/repaired by your Toyota dealer as soon as possible.

(e) Master Warning Light (⚠)

If the master warning light comes on, the warning light for the faulty system is highlighted or the message such as “Shift the position into range “P” when parking.” and “The batteries will not be charged if the transaxle is in Neutral N.” appears on the multi–information display. (See “Service reminder indicators and warning buzzers——Multi–information display” on page 114 or “Precautions for use” on page 13 or “Fuel gauge” on page 104 for instructions.)

(f) “ABS” Warning Light

The light comes on when the “IG–ON” mode is enabled. If the anti–lock brake system and the brake assist system work properly, the light turns off after the “READY” light comes on. Thereafter if the system malfunctions, the light comes on again.

When the “ABS” warning light is on (and the brake system warning light is on), the anti–lock brake system does not operate, but the brake system still operates conventionally.

If either of the following conditions occurs, this indicates a malfunction somewhere in the parts monitored by the warning light system. Contact your Toyota dealer as soon as possible to service the vehicle.

- The light does not come on when the “IG–ON” mode is enabled, or the light remains on after the “READY” light comes on.
- The light comes on while you are driving.

A warning light turning on briefly during operation does not indicate a problem.

⚠ CAUTION

If the “ABS” warning light remains on together with the red brake system warning light, immediately stop your vehicle at a safe place and contact your Toyota dealer.

In this case, not only the anti–lock brake system function and brake assist function will fail but also the vehicle will become extremely unstable during braking.

Either of the following conditions may occur, but does not indicate the malfunction:

- The light may stay on for about 60 seconds after the hybrid system is started. It is normal if it turns off after a while.
- Depressing the brake pedal repeatedly may turn on the light. It is normal if it turns off after a few seconds.

Not For Reproduction

(g) SRS Warning Light

This indicator comes on when the "IG–ON" mode is enabled. It goes off after about 6 seconds. This means the SRS front airbags, side and curtain shield airbags and seat belt pretensioners are operating properly.

The warning light system monitors the airbag sensor assembly, front airbag sensors, side and curtain shield airbag sensors, curtain shield airbag sensors, driver's seat position sensor, driver's seat belt buckle switch, seat belt pretensioner assemblies, interconnecting wiring and power sources.

If any of the following conditions occurs, this indicates a malfunction of the airbags or seat belt pretensioners. Contact your Toyota dealer as soon as possible.

- The light does not come on when the "IG–ON" mode is enabled or remains on for more than 6 seconds.
- The light comes on while driving.

(h) Open Door Warning Light

This light remains on until all the doors are completely closed.

(i) Low Fuel Level Indicator Light

This light blinks when the fuel level in the tank becomes nearly empty. Fill up the tank as soon as possible.

At the first blinking of the light, the message appears on the display to remind the driver to fill fuel.

In the following cases, contact your Toyota dealer:

- All the segments blink.
- The "E" mark and the segments indicating fuel blink.

(j) "VSC" Warning Light

This light warns that there is a problem somewhere in the vehicle stability control system.

The light will come on when the "IG–ON" mode is enabled and will go off after the "READY" light comes on.

If the light comes on while driving, the system does not work. However, as conventional braking operates when applied, there is no problem to continue your driving.

In the following cases, contact your Toyota dealer:

- The warning light does not come on after the "IG–ON" mode is enabled.
- The warning light remains on after the "READY" light comes on.
- The warning light comes on while you are driving.

Not For Reproduction

⚠ CAUTION

If the "VSC" warning light remains on together with the red brake system warning light, immediately stop your vehicle at a safe place and contact your Toyota dealer.

In this case, not only the vehicle stability control system will fail but also the vehicle will become extremely unstable during braking.

(k) Key Reminder Buzzer

This buzzer act as a reminder to remove the key if you open the driver's door when the hybrid system is off and the key is inserted into the key slot.

(l) P Position Reminder Buzzer

This buzzer will sound if the driver's door is opened while the hybrid transaxle is in "N", "D" or "B".

CHECKING SERVICE REMINDER INDICATORS (except the low fuel level warning light)

1. Apply the parking brake.
2. Open one of the doors.
   The open door warning light should come on.
3. Close the door.
   The open door warning light should go off.
4. Press the "POWER" switch twice without pressing the brake pedal to select the "IG–ON" mode. At this time, all the bulbs are checked in self–diagnosis mode.
   All the service reminder indicators except the open door warning light come on. The yellow brake system, "ABS" and "VSC" warning lights turn off after the "READY" light comes on.

There may be the case that the yellow brake system, "ABS" and "VSC" warning lights stay on for about 60 seconds after the hybrid system is started. It is normal if they go out after a while.

If any service reminder indicator or warning buzzer does not function as described above, have it checked by your Toyota dealer as soon as possible.

Not For Reproduction

—Multi–information display

24P118

Type 1

24P011c

Type 2

If an error occurs in the system, the warning message and icon appear.

For details on the warning display and how to remedy the system, see the description on the following pages.

Not For Reproduction

If the indicator comes on...		Do this.
(a)		Stop immediately and contact Toyota dealer.
(b)		Stop and check.
(c)		Stop and check.
(d)	P/S or PS	Take vehicle to Toyota dealer.
(e)		Take vehicle to Toyota dealer immediately.
(f)	MAIN	Take vehicle to Toyota dealer.

Not For Reproduction

(a) Charging System Warning Light

When there are problems in the charging system while the hybrid system is running, the warning light comes on.

NOTICE
When the charging system warning light comes on while the hybrid system is running, malfunctions may have occurred. If the warning light comes on, immediately stop the vehicle in a safe place and contact your Toyota dealer.

(b) Low Engine Oil Pressure Warning Light

This light warns that the engine oil pressure is too low.

If it stays on while you are driving, pull off the road to a safe place and stop the engine immediately. Call a Toyota dealer or qualified repair shop for assistance.

The light may come on when the oil level is extremely low. It is not designed to indicate low oil level, and the oil level must be checked using the level dipstick.

NOTICE
Do not drive the vehicle with the warning light on—even for one block. It may ruin the engine.

(c) High Coolant Temperature Warning Light

The light operates to warn that the hybrid system is almost overheating.

If it comes on while you are driving, stop the vehicle and check your hybrid system. For detailed instructions, see “If your vehicle overheats” on page 240.

Your vehicle may overheat during severe operating conditions, such as:

- Driving up a long hill on a hot day.
- Reducing speed or stopping after high speed driving.

NOTICE
◆ ***Do not remove the thermostat in the cooling system as this may cause the hybrid system to overheat. The thermostat is designed to control the flow of coolant to keep the temperature of the hybrid system within the specified operating range.*** ◆ ***Continued driving with the light on could result in the overheating of hybrid system.***

Not For Reproduction

(d) Electric Power Steering System Warning Light

This light comes on when the power steering control system fails.

⚠ CAUTION

If this light comes on, take your vehicle to the Toyota dealer as soon as possible. In this case, you may feel the heavy steering wheel maneuvering. Drive your vehicle while gripping the steering wheel firmly.

(e) Hybrid System Warning Light ( )

This light comes on if there is a problem in the electric motor, inverter unit, hybrid battery, etc.

If this light is on, stop your vehicle in a safe place immediately and contact your Toyota dealer.

Even if the hybrid system warning light comes on, you can temporarily increase the vehicle speed by depressing the accelerator pedal. Immediately pull up your vehicle to a safe place and contact your Toyota dealer.

(f) Hybrid Battery Warning Light

This light comes on in the following cases.

a. The hybrid battery voltage drops when the hybrid transaxle is left in “N” position.

The system works properly if you put the hybrid transaxle in “P” position and the light goes off.

b. The hybrid battery is discharged.

If this light comes on with the “READY” light on in case of b., stop your vehicle in a safe place and contact your Toyota dealer.

Not For Reproduction

Not For Reproduction

SECTION 2 – 6

OPERATION OF INSTRUMENTS AND CONTROLS

“POWER” switch, Transmission and Parking brake

Push button start system 120
Hybrid transaxle 126
Vehicle stability control system 130
Parking brake 132
Cruise control 132

Not For Reproduction

Push button start system—

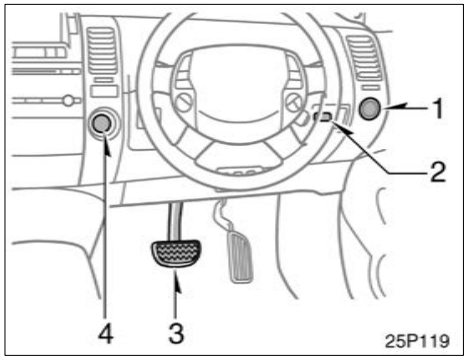

The push button start system is used to start or stop the hybrid system and select “ACC”, “IG–ON” or “OFF” mode. (See “—Selecting the push button start system mode” on page 122 and “How to start the hybrid system” on page 226.) The system contains the following components.

1. “POWER” switch
2. Key slot
3. Brake pedal
4. Shift lever

—Key slot

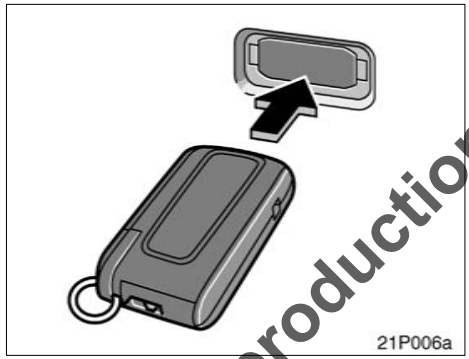

Your vehicle keys and the key slot are different shapes from conventional ones.

Keep the following in mind when operating the key:

- When inserting the key, be sure to push it in all the way.
- When pulling out the key, be careful because it will be pushed out by the spring and it might fly out.
- If the key cannot be pulled out, push it in all the way again, then pull it out.

Not For Reproduction

⚠ CAUTION

Do not put your finger into the key slot. Your finger might be injured.

NOTICE

Observe the following instructions, or the key mechanism might be damaged and will not work properly.

- ***The key should be operated with a clean hand and fingers.***
- ***Do not insert the key forcibly.***
- ***Do not insert any key other than genuine formal keys into the key slot.***
- ***Do not pull out the key forcibly when it cannot be removed.***
- ***Do not put water, oil, foreign objects, etc. into the key slot.***
- ***Do not insert a wet, oily or damaged key into the key slot.***
- ***Do not affix a sticker on the key.***
- ***Do not insert the key in the wrong way.***

◆ *Do not pull out the key ring when removing the key out of the key slot.*

Should you find anything unusual, contact your Toyota dealer as soon as possible.

—“POWER” switch

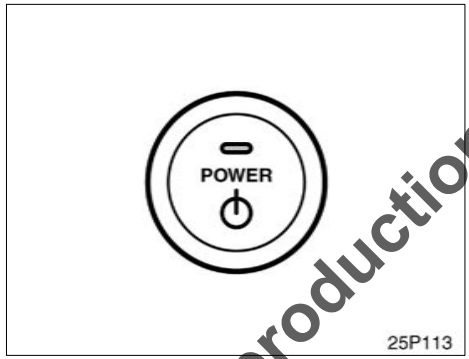

Press the “POWER” switch slowly and surely. Quick operation may not activate the desired mode.

⚠ CAUTION

- **Do not press the switch while driving, except in an emergency.**
- **In hot weather, the switch surface may get hot. Take care not to get burned.**

NOTICE

Observe the following instructions or the push switch start system may not work properly.

◆ ***The switch should be operated with a clean finger. Do not use an oily or dirty finger.***

◆ ***Be careful not to spill water or other liquid on the switch.***

In the following conditions, contact your Toyota dealer as soon as possible.

◆ ***If the indicator on the switch flashes in amber, the system may be malfunctioning. Once you turn the power off, it may not turn on again.***

◆ ***If you find anything unusual in the switch function, refrain from using the vehicle.***

In the following condition, have your vehicle inspected by your Toyota dealer.

◆ ***The indicator light on the “POWER” switch does not come on when the clearance lights are turned on.***

Not For Reproduction

—Selecting the push button start system mode

(with smart function—on some models)

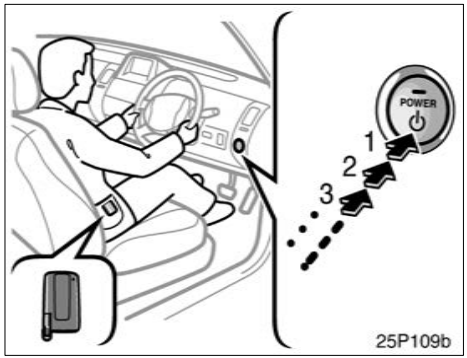

Without depressing the brake pedal

Carrying a smart key allows you to operate the "POWER" switch without the key being inserted into the key slot.

Each time you press the "POWER" switch briefly without the brake pedal depressed, the hybrid system mode changes in the order of "OFF", "ACC", "IG–ON" and then back to "OFF".

The smart function can be set to become inoperative using the smart cancel switch. For details, see "DEACTIVATING THE SMART FUNCTION" on page 31.

1) "ACC" (Green indicator is turned on)

Accessories such as the radio operate.

Pressing the "POWER" switch briefly without depressing the brake pedal in the "OFF" mode turns on this mode.

In the "ACC" mode, pressing the "POWER" switch briefly while depressing the brake pedal will start the hybrid system.

If you leave your vehicle in the "ACC" mode for about an hour, the hybrid system is automatically turned off.

2) "IG–ON" (Amber indicator is turned on)

All accessories are operable.

Pressing the "POWER" switch briefly without depressing the brake pedal in the "ACC" mode turns on this mode.

In the "IG–ON" mode, pressing the "POWER" switch briefly while depressing the brake pedal will start the hybrid system. However, if "N" position is selected, the hybrid system will be turned in the "OFF" mode.

3) "OFF" (Indicator is turned off)

The hybrid system is off.

You may hear a motor sound in the engine compartment for a few seconds after the system is turned off and about 90 seconds have passed.

The hybrid vehicle immobilizer system is automatically set. See "Hybrid vehicle immobilizer system" on page 20.

Not For Reproduction

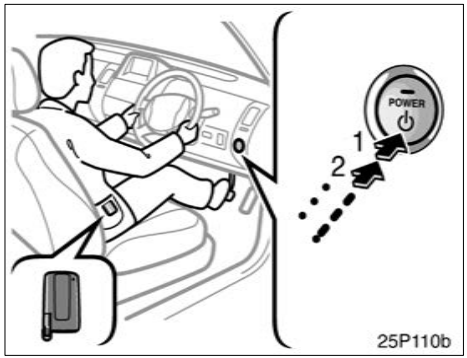

With the brake pedal depressed

The hybrid system will start and stop by pressing the "POWER" switch briefly with the brake pedal depressed.

You may hear a motor sound in the engine compartment when the brake pedal is depressed with the hybrid system off.

1) "START" (Amber indicator comes on for a few seconds)

The hybrid system is ready to operate and all accessories are operable. ("IG–ON")

Press the "POWER" switch with the brake pedal depressed.

For starting tips, see "How to start the hybrid system—" on page 226.

If in an emergency, you must turn the hybrid system off while the vehicle is moving, press the "POWER" switch for more than 3 seconds. At this time, the "ACC" mode and shift position "N" are automatically enabled.

2) "OFF" (Indicator is turned off)

The hybrid system is off.

You may hear a motor sound in the engine compartment for a few seconds after the system is turned off and about 90 seconds have passed.

The hybrid vehicle immobilizer system is automatically set. See "Hybrid vehicle immobilizer system" on page 20.

NOTICE

- ***The hybrid system cannot be started when the shift position is in "N". Be sure to put it in "P" and then start the system.***
- ***Do not leave the hybrid system in "ACC" or "IG–ON" for a long time. The 12 volt battery will discharge.***
- ***The hybrid mode in which the battery is discharged or disconnected is retained in memory, and that mode is turned on when power is applied.***

When you leave your vehicle, be sure to turn the "POWER" switch off and carry the smart key.

If you get out of your vehicle while carrying a key without turning off the "POWER" switch and then close the door, a warning tone sounds inside and beeps sound outside.

INFORMATION

You can insert a genuine key while in the "IG–ON" mode or with the hybrid system starting. Do not insert any key other than genuine keys.

Not For Reproduction

—Selecting the push button start system mode
(without smart function)

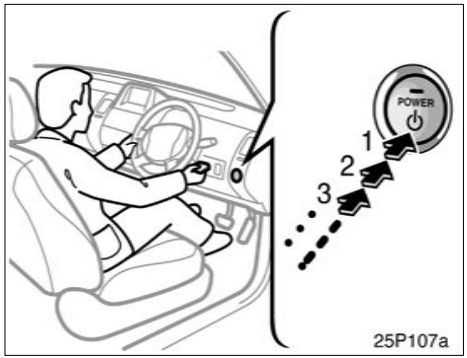

Without depressing the brake pedal

Each time you press the "POWER" switch briefly without the brake pedal depressed, the hybrid system mode changes in the order of "OFF", "ACC", "IG–ON" and then back to "OFF".

1) "ACC" (Green indicator is turned on)

Accessories such as the radio operate.

Pressing the "POWER" switch briefly without depressing the brake pedal in the "OFF" mode turns on this mode.

The key can be removed at this position. The hybrid system is automatically turned off.

In the "ACC" mode, pressing the "POWER" switch briefly while depressing the brake pedal will start the hybrid system.

If you leave your vehicle in the "ACC" mode for about an hour, the hybrid system is automatically turned off.

2) "IG–ON" (Amber indicator is turned on)

All accessories are operable.

Pressing the "POWER" switch briefly without depressing the brake pedal in the "ACC" mode turns on this mode.

In the "IG–ON" mode, pressing the "POWER" switch briefly while depressing the brake pedal will start the hybrid system. However, if "N" position is selected, the hybrid system will be turned in the "OFF" mode.

3) "OFF" (Indicator is turned off)

The hybrid system is off. The key can be removed at this position.

You may hear a motor sound in the engine compartment for a few seconds after the system is turned off and about 90 seconds have passed.

Once you remove the key, the hybrid vehicle immobilizer system is automatically set. See "Hybrid vehicle immobilizer system" on page 20.

Not For Reproduction

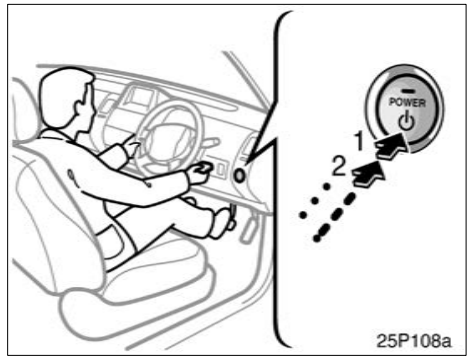

With the brake pedal depressed

The hybrid system will start and stop by pressing the "POWER" switch briefly with the brake pedal depressed.

You may hear a motor sound in the engine compartment when the brake pedal is depressed with the hybrid system off.

1) "START" (Amber indicator comes on for a few seconds.)

The hybrid system is ready to operate and all accessories are operable. ("IG–ON")

Insert the key and press the "POWER" switch briefly with the brake pedal depressed.

For starting tips, see “How to start the hybrid system—” on page 226.

If, in an emergency, you must turn the hybrid system off while the vehicle is moving, press the “POWER” switch more than 3 seconds. At this time, the “ACC” mode and shift position “N” are automatically enabled.

2) “OFF” (Indicator is turned off)

The hybrid system is off. The key can be removed at this position.

You may hear a motor sound in the engine compartment for a few seconds after the system is turned off and about 90 seconds have passed.

Once you remove the key, the hybrid vehicle immobilizer system is automatically set. See “Hybrid vehicle immobilizer system” on page 20.

NOTICE

- ***The hybrid system cannot be started when the shift position is in “N”. Be sure to put it in “P” and then start the system.***
- ***Do not leave the hybrid system in “ACC” or “IG–ON” for a long time. The 12 volt battery will discharge.***
- ***The hybrid mode in which the battery is discharged or disconnected is retained in memory, and that mode is turned on when power is applied.***

Not For Reproduction

Hybrid transaxle

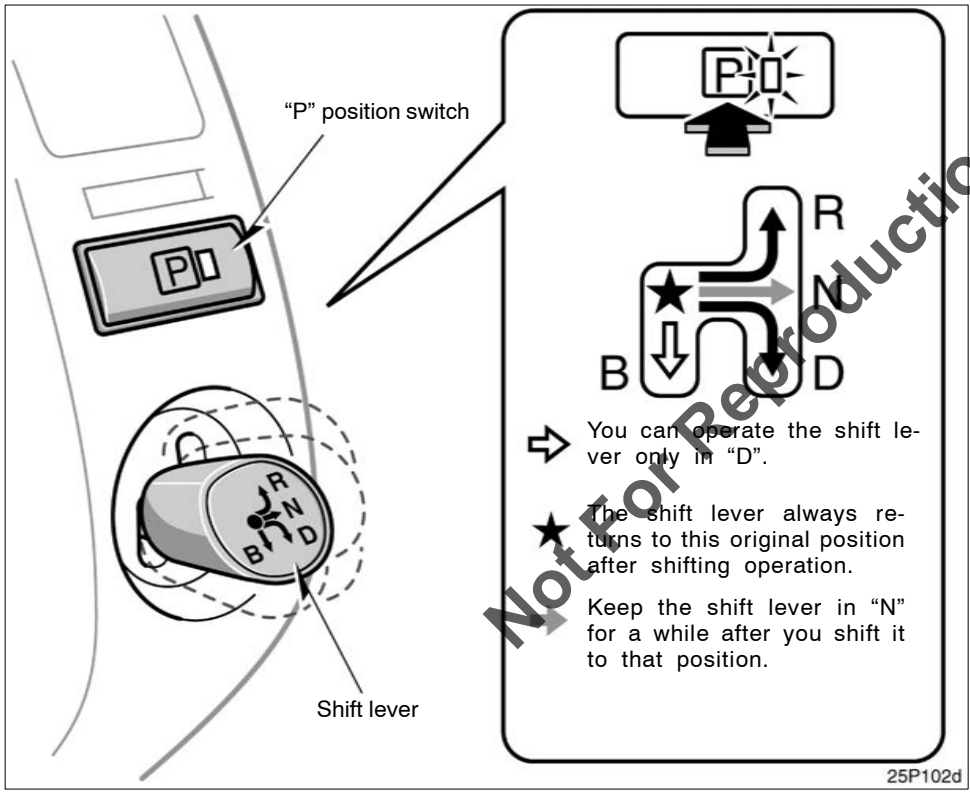

Not For Reproduction

Your hybrid transaxle has a shift–by–wire system to minimize incorrect operation. This means you can only shift to other position from "P" when the brake pedal is depressed.

With the following improper shifting, the rejection function operates and a beep sounds so the hybrid transaxle cannot be shifted.

(i) When you attempt to shift the transaxle from the "P" position without depressing the brake pedal.

(ii) When you push the "P" switch while driving.

(iii) When you operate the shift lever from "D" to "R" or vice versa while the vehicle is moving.

(iv) When you operate the shift lever to "B" from any position other than "D".

In case of (i), the transaxle remains in "P". In case of (ii) through (iv), the transaxle is automatically shifted to "N".

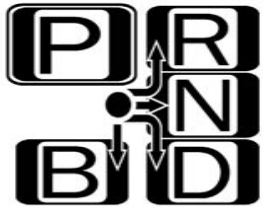

25P125

(a) Shift lever

The shift position is displayed on the instrument cluster.

R: Reverse position (buzzer sounds)

N: Neutral position

D: Normal driving position

B: Engine braking position (shown only while in “D”)

NOTICE

Observe the following instructions. Otherwise, the lever may cause a malfunction, resulting in trouble:

- ***Do not remove the knob on the lever.***
- ***Do not use a knob other than the originally fitted knob.***
- ***Do not hang anything on the lever.***

Should you find anything unusual, contact your Toyota dealer as soon as possible.

Not For Reproduction

(b) “P” position switch

The “P” (parking) position is displayed on the instrument cluster, and the indicator on the “P” position switch comes on.

(c) Normal driving

1. Start the hybrid system as instructed in “How to start the hybrid system” on page 226.
2. With your foot holding down the brake pedal, shift the shift lever to “D”.

⚠ CAUTION

Never put your foot on the accelerator pedal while shifting. Doing so can cause abrupt acceleration.

3. Release the parking brake and brake pedal. Depress the accelerator pedal slowly for smooth starting.

   When you shift the transaxle to “D” while backing up, an alarm sounds and the transaxle is shifted to “N”.

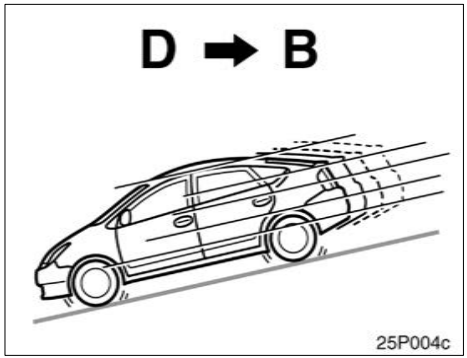

(d) Using engine braking

To use engine braking, shift the shift lever to “B” position.

During high speed driving, you may feel that deceleration by engine braking is less than that of a typical vehicle.

Do not continue normal driving with the transaxle in “B” for a long time. This may cause decreased fuel economy. To prevent this, use “D” for normal driving.

When you shift the transaxle to “B” from a position other than “D”, an alarm sounds and the transaxle is automatically shifted to “N”.

⚠ CAUTION

Be careful when downshifting on a slippery surface. Abrupt shifting could cause the vehicle to skid or spin.

(e) Backing up

1. Bring the vehicle to a complete stop.
2. With the brake pedal held down with your foot, shift the shift lever to the “R” position. You will hear beeps while the transaxle is in “R”.

When you shift the transaxle to “R” while driving, an alarm sounds and the transaxle is shifted to “N”.

(f) Parking

1. Bring the vehicle to a complete stop.
2. With the brake pedal pressed down, fully depress the parking brake pedal to apply the parking brake securely.
3. With the brake pedal pressed down, push the “P” position switch.

If you press the “POWER” switch while stopping, the transaxle is automatically shifted to the “P” and the hybrid system is turned off.

If the driver’s door is opened when the transaxle is in “N”, “D” or “B”, beep sounds and a warning message appears on the multi–information display to warn you to shift the transaxle to “P”.

If you push the “P” position switch while driving, an alarm sounds and the transaxle is automatically shifted to “N”.

NOTICE

Be sure to put the hybrid transaxle in “P” when parking. In “N”, the hybrid battery will not be charged even if the gasoline engine is running. You cannot start your vehicle if the transaxle is left in “N” for a long time because the hybrid battery will discharge.

When shifting the transaxle from “P” on the slope, a large parking lock releasing noise will be generated. However, this does not indicate a malfunction.

Not For Reproduction

(g) Vehicle driving characteristics

Creeping

In order to hold the vehicle properly on an incline and for better accelerator pedal operation at starting, your vehicle is designed like a typical automatic transmission vehicle which tends to move without depressing the accelerator pedal with the transaxle in a position other than “P” or “N”.

With the transaxle in a position other than “P” or “N”, depress the brake pedal firmly even when stopped and apply the parking brake as required.

When moving in a compact area or during a traffic jam, it is an effective way to control the speed using only the brake pedal operation without depressing the accelerator pedal.

Regenerative brake

When the accelerator pedal is released or the brake pedal is depressed, the electric motor acts as a generator and converts kinetic energy to electric energy to provide deceleration and recover electric energy to charge the hybrid battery.

At this time, the electric motor running noise may increase.

The operation is the same as a typical gasoline powered vehicle.

You may experience the following condition while braking. As they do not indicate a malfunction, perform braking as usual:

- In the “OFF” mode, pressing the “POWER” switch once or twice will select “ACC” or “IG–ON” only if the brake pedal is not depressed. In this condition, the brake pedal may move a little.

Hybrid driving

This vehicle runs in combination with the gasoline engine and electric motor.

If the “READY” light is on, you can start your vehicle even with the gasoline engine stopped.

Not For Reproduction

(h) If the system malfunctions

In the following conditions, there is some problem in the system.

- The indicator on the “P” position switch flashes. However, this does not indicate a malfunction unless a warning message appears in the multi–information display.
- All frames of shift position indicators in the instrument cluster flash.
- The parking system error message appears on the multi–information display.
- The instrument cluster and multi–information display does not come on when the “IG–ON” mode is enabled.

In these cases, stop your vehicle in a safe and level place, apply the parking brake securely and contact your Toyota dealer immediately.

(i) When the 12 volt battery is disconnected

Before you disconnect the 12 volt battery, confirm the shift position is “P” and apply the parking brake completely.

After you reconnect the 12 volt battery, shift the shift lever to “N” and confirm the shift position is in “N” when the “IG–ON” mode is enabled.

Vehicle stability control system

The vehicle stability control system automatically controls the brakes and hybrid system to help prevent the vehicle from skidding when cornering on a slippery road surface or operating steering wheel abruptly.

The vehicle stability control system is activated when the vehicle speed is more than about 15 km/h (9 mph).

CAUTION

- **Do not rely exclusively on the vehicle stability control system. Even if the vehicle stability control system is operating, you must always drive carefully and attentively to avoid death or serious injury. Reckless driving will result in an unexpected accident. If the slip indicator light flashes, sounding an alarm, special care should be taken while driving.**
- **Only use tires of specified size. The size, manufacturer, brand and tread pattern for all 4 tires should be the same. If you use tires other than specified, or mixed types or size, the vehicle stability control system may not function correctly. When replacing the tires or wheels, contact your Toyota dealer. (See "Checking and replacing tires" on page 277.)**

Not For Reproduction

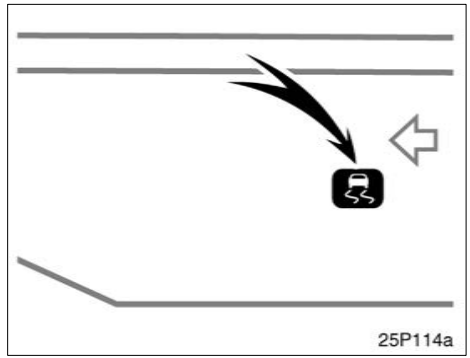

Slip indicator light

If the vehicle is going to skid during driving, the slip indicator light blinks and an alarm sounds intermittently. Special care should be taken while driving.

The slip indicator light blinks in the following conditions also.

- The vehicle tires are racing. Utmost care is required when driving.
- When the anti–lock brake system is operating. See "Brake system" on page 217 for details.

The slip indicator light comes on when the “IG–ON” mode is enabled and will go off after the “READY” light comes on. If the indicator light does not come on when the hybrid system is turned on, contact your Toyota dealer.

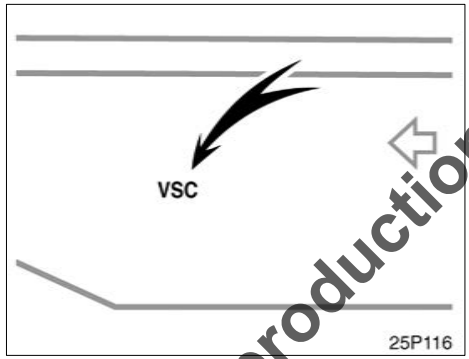

“VSC” warning light

This light warns that there is a problem somewhere in the vehicle stability control system.

The light will come on when the “IG–ON” mode is enabled and will go off after the “READY” light comes on.

If the light comes on while driving, the system does not work. However, because the conventional braking still operates, you can drive your vehicle without damaging it. Contact your Toyota dealer.

In the following cases, contact your Toyota dealer:

- The warning light does not come on after the “IG–ON” mode is enabled.
- The warning light remains on after the “READY” light comes on.
- The warning light comes on while driving.

Not For Reproduction

Parking brake

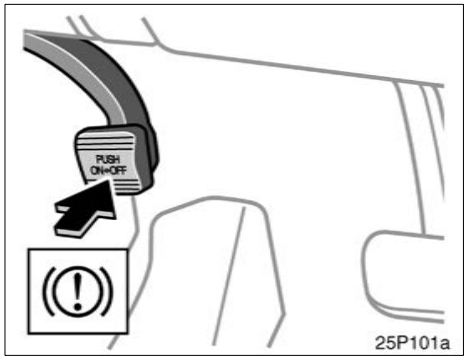

When parking, firmly apply the parking brake to avoid inadvertent creeping.

To set: Hold the regular brake pedal down with your right foot. Depress the parking brake pedal with your left foot.

To release: Hold the regular brake pedal down with your right foot and depress the parking brake pedal with your left foot. When you lift your left foot, the parking brake pedal will follow it to the released position.

To remind you that the parking brake is set, the parking brake reminder light in the instrument panel remains on until you release the parking brake.

⚠ CAUTION

- **Driving with the parking brake engaged can reduce braking power.**
- **Before driving, be sure the parking brake is fully released and the parking brake reminder light is off.**

Not For Reproduction

Cruise control

The cruise control allows you to cruise the vehicle at a desired speed over 40 km/h (25 mph) even with your foot off the accelerator pedal.

Your cruising speed can be maintained up or down grades within the limits of hybrid system performance, although a slight speed change may occur when driving up or down the grades. On steeper hills, a greater speed change will occur so it is better to drive without the cruise control.

⚠ CAUTION

- **To help maintain maximum control of your vehicle, do not use the cruise control when driving in heavy or varying traffic, or on slippery (rainy, icy or snow–covered) or winding roads.**
- **Avoid vehicle speed increases when driving downhill. If the vehicle speed is too fast in relation to the cruise control set speed, cancel the cruise control then shift the shift lever to “B” position to use engine braking to slow down.**

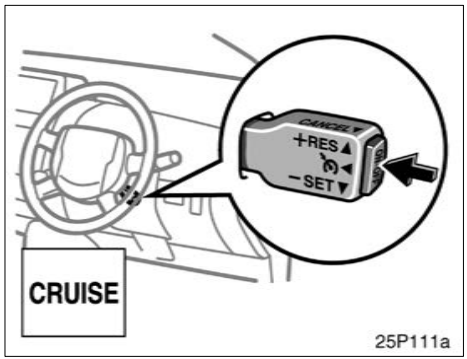

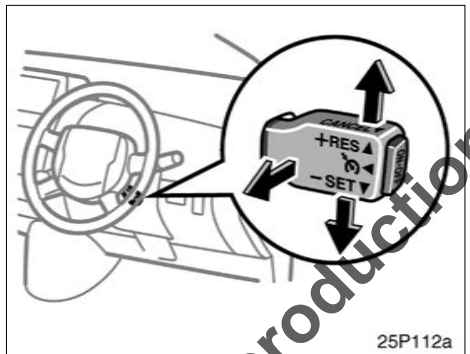

TURNING THE SYSTEM ON

To operate the cruise control, push the "ON·OFF" switch. This turns the system on. The indicator light in the instrument panel shows that you can now set the vehicle at a desired cruising speed. Another push on the switch will turn the system completely off.

⚠ CAUTION

To avoid accidental cruise control engagement, keep the "ON·OFF" switch off when not using the cruise control.

SETTING AT A DESIRED SPEED

The transaxle must be in "D" before you set the cruise control speed.

Bring your vehicle to the desired speed, push the lever down in the "– SET" direction and release it. This sets the vehicle at that speed.

If the speed is not satisfactory, tap the lever up for a faster speed, or tap it down for a slower speed. Each tap changes the set speed by 1.6 km/h (1.0 mph). You can now take your foot off the accelerator pedal.

If you need acceleration—for example, when passing—depress the accelerator pedal enough for the vehicle to exceed the set speed. When you release it, the vehicle will return to the speed set prior to the acceleration.

CANCELLING THE PRESET SPEED

You can cancel the preset speed by:

a. Pulling the control lever in the "CANCEL" direction and releasing it.

b. Depressing the brake pedal.

If the vehicle speed falls below about 40 km/h (25 mph), the preset speed will automatically cancel out.

If the vehicle speed drops 16 km/h (10 mph) below the preset speed, the preset speed will also automatically cancel out.

If the preset speed automatically cancels out other than for the above cases, have your vehicle checked by your Toyota dealer at the earliest opportunity.

Not For Reproduction

RESETTING TO A FASTER SPEED

Push the lever up in the "+ RES" direction and hold it. Release the lever when the desired speed is attained. While the lever is held up, the vehicle will gradually gain speed.

However, a faster way to reset is to accelerate the vehicle and then push the control lever down in the "– SET" direction.

RESETTING TO A SLOWER SPEED

Push the lever down in the "– SET" direction and hold it. Release the lever when the desired speed is attained. While the lever is held down, the vehicle speed will gradually decrease.

However, a faster way to reset is to depress the brake pedal and then push the control lever down in the "– SET" direction.

RESUMING THE PRESET SPEED

If the preset speed is cancelled by pulling the control lever or by depressing the brake pedal, pushing the lever up in the "+ RES" direction will restore the speed set prior to cancellation.

However, once the vehicle speed falls below about 40 km/h (25 mph), the preset speed will not be resumed.

CRUISE CONTROL FAILURE WARNING

If the "CRUISE" indicator light in the instrument cluster flashes when using the cruise control, press the "ON·OFF" button to turn the system off and then press it again to turn it on.

If any of the following conditions then occurs, there is some trouble in the cruise control system.

- The indicator light does not come on.
- The indicator light flashes again.
- The indicator light goes out after it comes on.

If this is the case, contact your Toyota dealer and have your vehicle inspected.

Not For Reproduction

OPERATION OF INSTRUMENTS AND CONTROLS

Multi–information display

Reference 136
Before using the multi–information display 138
Switch operation 138
Functions 139
Information 141
Adjustment 145
Outside temperature display 146

Not For Reproduction

Reference

▶Type 1

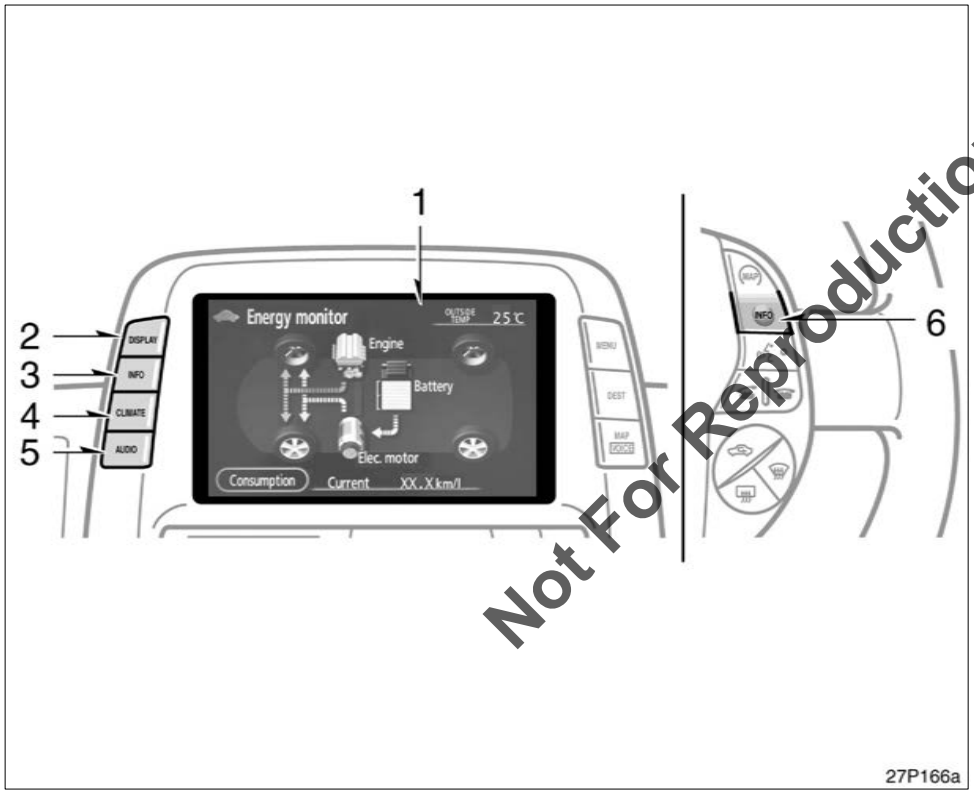

Not For Reproduction

1. Multi–information display
   (See page 138 for details.)
2. “DISPLAY” button
   The display adjustment screen is shown.
   (See page 145 for details.)
3. “INFO” button
   The information menu screen is shown.
   (See page 141 for details.)
4. “CLIMATE” button
   The air conditioning operation screen is shown.
   (See page 184 for details.)
5. “AUDIO” button
   The audio operation screen is shown.
   (See page 150 for details.)
6. “INFO” button (on the steering pad)
   The trip information screen is shown.
   (See page 143 for details.)

▶**Type 2**

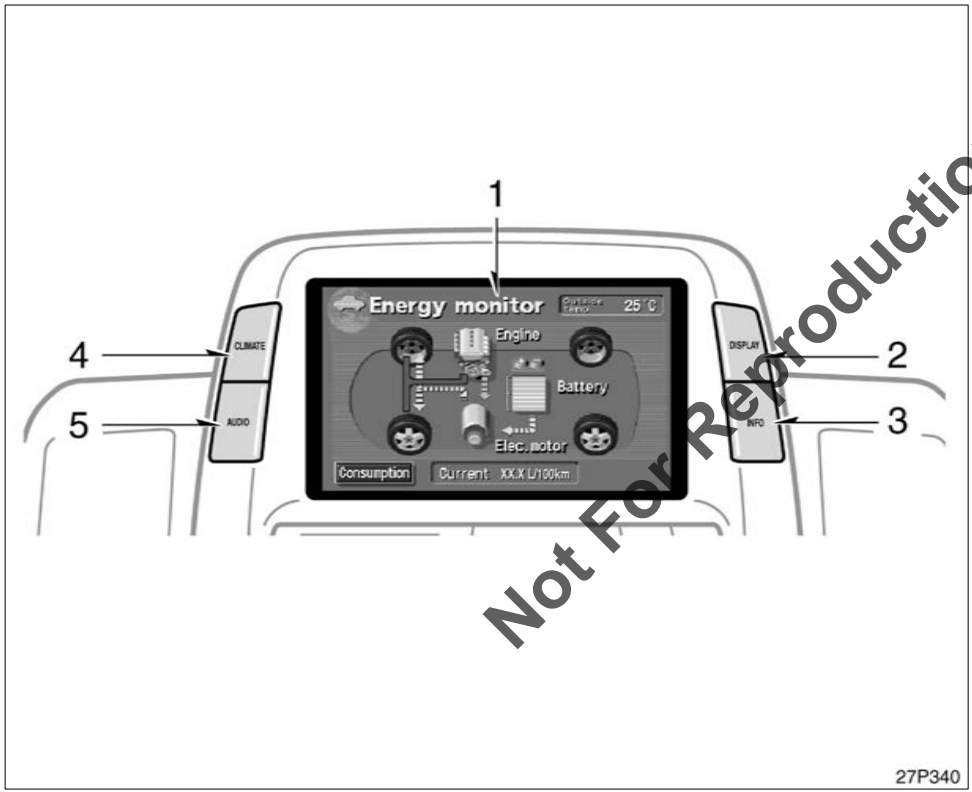

1. Multi–information display
   (See page 138 for details.)
2. “DISPLAY” button
   The display adjustment screen is shown.
   (See page 145 for details.)
3. “INFO” button
   The information menu screen is shown.
   (See page 141 for details.)
4. “CLIMATE” button
   The air conditioning operation screen is shown.
   (See page 184 for details.)
5. “AUDIO” button
   The audio operation screen is shown.
   (See page 150 for details.)

Not For Reproduction

Before using the multi-information display

Type 1

Type 2

Operate the multi-information display with the ignition switch on.

When the "ACC" mode is enabled, the initial screen appears and the system begins operating.

After a few seconds, the previous mode display will appear.

If the electrical power source has been disconnected from the multi-information display, the display will be automatically set to the initial mode.

CAUTION

Do not adjust the display while the vehicle is moving. Be sure to adjust the display only when the vehicle is stopped.

Not For Reproduction

Switch operation

This system operates mainly by the switches on the screen. To protect the screen, lightly touch switches on the screen with your finger. When you touch a switch on the screen or on the bezel, a beep sounds.

- If the system does not respond to a touch of a switch, move your finger away from the screen and then touch it again.
- You cannot operate dimmed switches.
- Wipe off fingerprints on the surface of the display using a glass cleaning cloth.
- The displayed image may become darker and moving images may be slightly distorted when the display is cold.
- When you look at the screen through polarized material such as polarized sunglasses, the screen may be dark and hard to see. If so, look at the screen from different angles, adjust the screen settings on the "Display" screen, or take off your sunglasses.

Functions

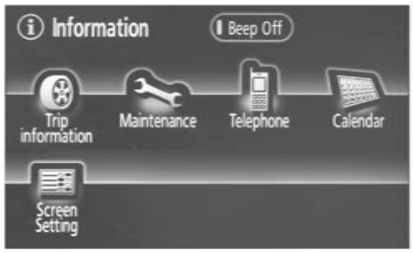

27P140

Type 1*

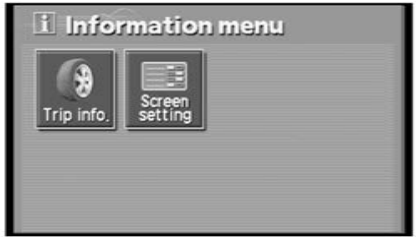

26P179

Type 2

1. Trip information, Language and Screen setting

For details, see page 141.

*: For other functions (Maintenance, Telephone, Calender and Beep setting), see the separate “Navigation System Owner’s Manual”.

Not For Reproduction

27P350

2. Adjustment

The contrast and brightness on the screen are adjusted. For details, see page 145.

27P359

3. Air conditioner

Climate setting operations are available. For details, see page 184.

26P268

4. Audio

The radio and cassette tape operations are available. For details, see page 150.

24P118

5. Warning display

The warning symbol for the faulty system appears. For details, see page 114.

Not For Reproduction

Information

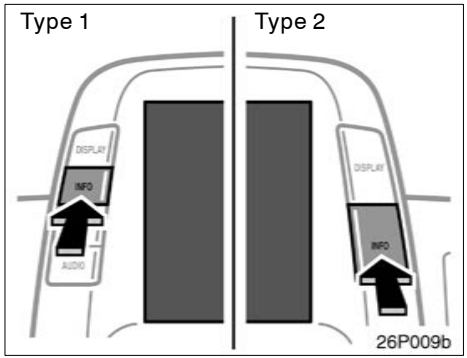

Push the "INFO" button to display the "Information Menu" screen.

Type 1

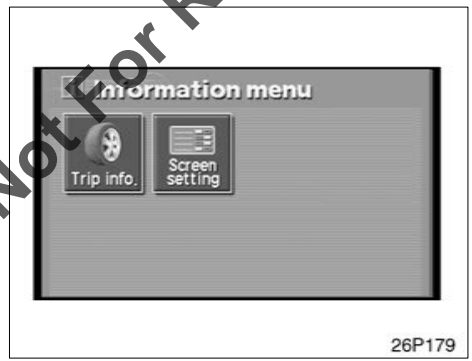

Type 2

Trip information: The energy monitor and fuel consumption screen are selected.

Screen setting: The screen setting screen is shown.

Not For Reproduction

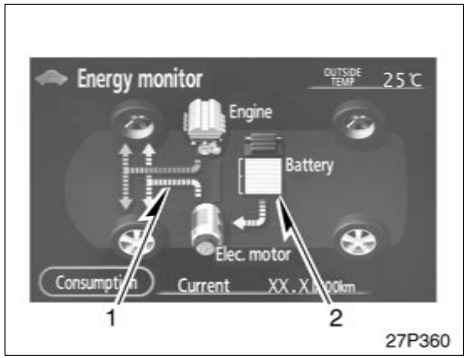

Type 1

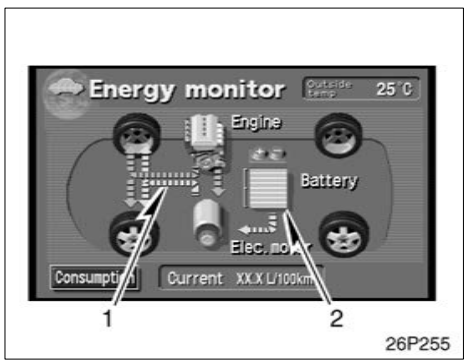

Type 2

Energy monitor screen

Touch the “Energy” switch. Vehicle driving condition, hybrid system operating condition and energy recovery condition are shown.

1. Indicates the flow of energy by orange and yellow arrows. While the energy is recovered, the arrows change the pointing direction and turn green.
2. Indicates the remaining capacity of the hybrid battery.

The screen display updates every 3 seconds, so it may not coincide with the actual status.

Not For Reproduction

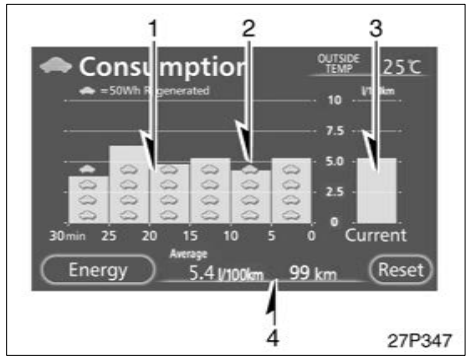

Type 1

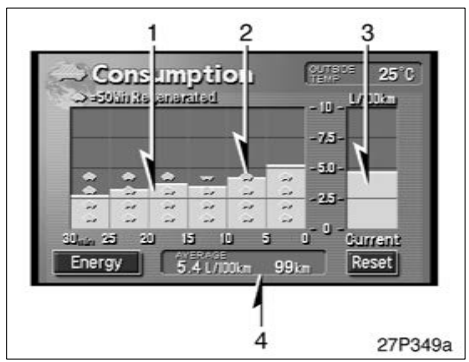

Type 2

Fuel consumption screen

Touch the “Consumption” switch. Average fuel consumption, momentary fuel consumption and recovered energy are shown.

1. Indicates the past momentary fuel consumption every 5 minutes.
2. Indicates the energy recovered for 5 minutes with symbols. One symbol refers to 50 Wh or the energy by which a 50 W bulb illuminates for an hour. Up to 4 symbols will be shown.
3. Indicates the current momentary fuel consumption.

However, when the vehicle is stopped with the gasoline engine not running, note that the display may indicate the maximum level.

4. Indicates the average fuel consumption after being reset. When the “Reset” switch is touched or more than 10 L (2.6 gal., 2.2 Imp.gal.) fuel is supplied, the average fuel consumption is reset.

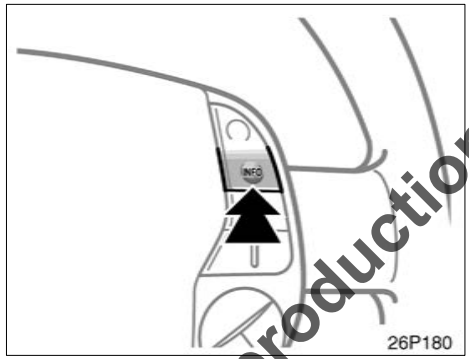

Steering switch operation (with Navigation system)

The trip information screen appears directly by pressing the “INFO” button on the right side of the steering pad. Each press changes the “Energy Monitor” and “Consumption” screens alternately.

Not For Reproduction

—Screen setting

Type 1

AUTOMATIC TRANSITION

The function returning to the previous screen from the audio or air conditioner screen is selectable. Select “On” or “Off” and then touch “OK”.

On: The previous screen automatically returns from the audio or air conditioner screen 20 seconds after the end of audio or air conditioner screen operation.

Off: The audio or air conditioner screen remains on.

SWITCH COLOR

Select the desired switch color and touch "OK".

DELETE PERSONAL DATA

The following personal data can be deleted or returned to their default settings:

- **Maintenance conditions**
- **Maintenance information "off" setting**
- **Memory points**
- **Areas to avoid**
- **Previous points**
- **Route trace**
- **User selection settings**
- **Phone book data**
- **Dialed numbers and received calls**
- **Speed dial**
- **Bluetooth phone data**
- **Security code**

This function is available only when the vehicle is not moving.

For details, see the separate "Navigation System Owner's Manual".

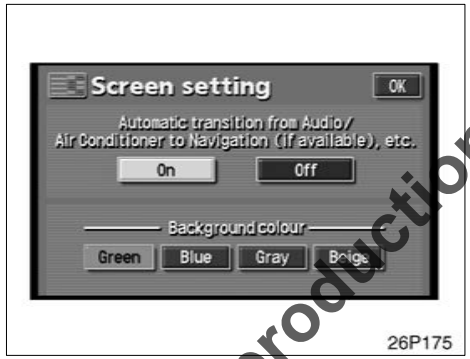

Type 2

AUTOMATIC TRANSITION

The function returning to the previous screen from the audio or air conditioner screen is selectable. Select "On" or "Off" and then touch "OK".

On: The previous screen automatically returns from the audio or air conditioner screen 20 seconds after the end of audio or air conditioner screen operation.

Off: The audio or air conditioner screen remains on.

BACKGROUND COLOR

Select the desired background color and touch "OK".

Not For Reproduction

Adjustment

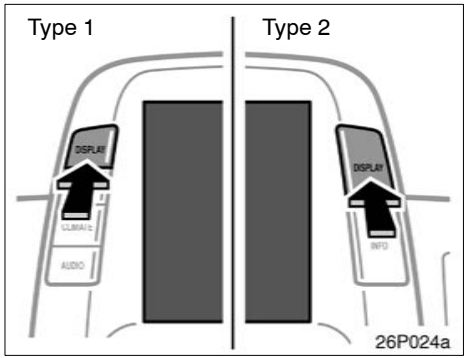

Push the "DISPLAY" button to display the "Display" screen.

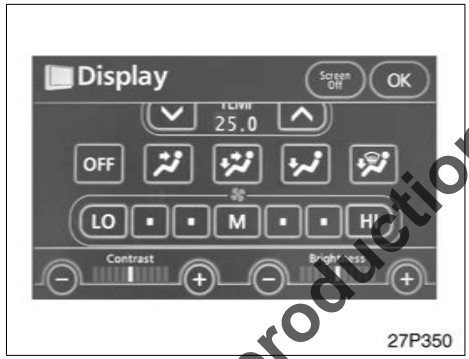

Type 1

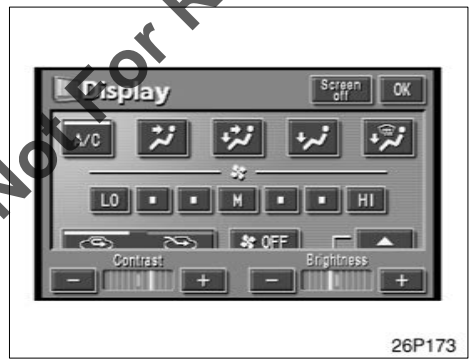

Type 2

Contrast and brightness adjustment

Contrast "+":
Strengthens the contrast of the screen.

Contrast "–":
Weakens the contrast of the screen.

Brightness "+": Brightens the screen.

Brightness "–": Darkens the screen.

The screen turns off when you push the "Screen off". To turn the display screen back on, push any bezel switch such as "INFO", etc. The selected screen appears.

Not For Reproduction

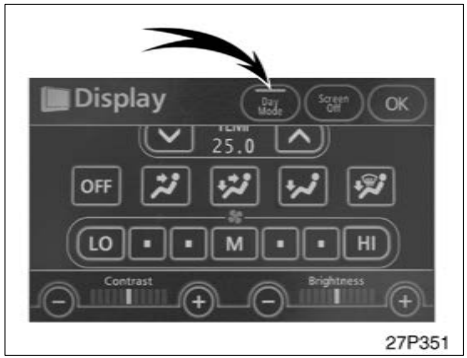

Type 1

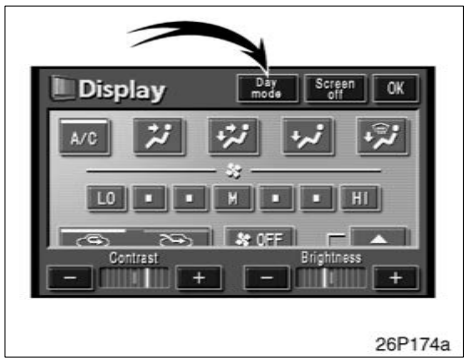

Type 2

Depending on the position of the headlight switch, the screen changes to the day mode or night mode.

To display the screen in the day mode even with the headlight switch on, touch "Day mode" on the adjustment screen for brightness and contrast control.

However, if the instrument panel light control button is on, mode switching cannot be done. It remains in the day mode. In this case, "Day mode" is not shown on the screen.

If the screen is set in the day mode with the headlight switch turned to on, this condition is memorized in the system even with the hybrid system turned off.

Not For Reproduction

Outside temperature display

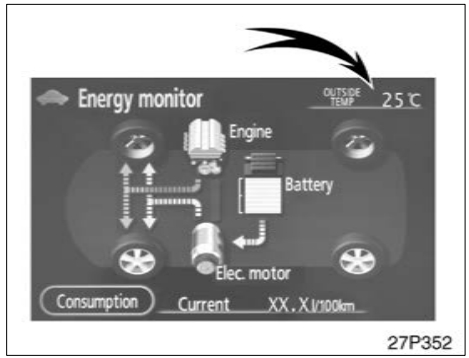

Type 1

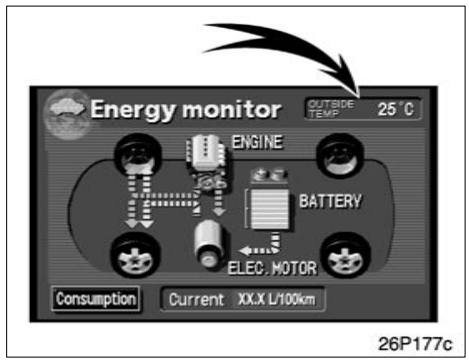

Type 2

The outside temperature is shown ranging from –30°C (–22°F) up to 50°C (122°F) at the upper right of the energy consumption or energy monitor screen or the upper left/right of the air conditioner screen.

Separate to the above screen, when the outside temperature drops below 3°C (37°F), * and the outside temperature are displayed in the upper portion of the screen for a few seconds.

(This outside temperature is displayed even if on the map screen etc.)

*: may not be displayed depending on the display type.

Not For Reproduction

Not For Reproduction

OPERATION OF INSTRUMENTS AND CONTROLS

Audio system

Reference 150
Using your audio system 152
Radio operation 158
Compact disc player operation (Type 1) 163
Compact disc player operation (Type 2) 168
MP3/WMA player operation 170
Audio remote controls 174
Audio system operating hints 175

Not For Reproduction

Reference

▶Type 1

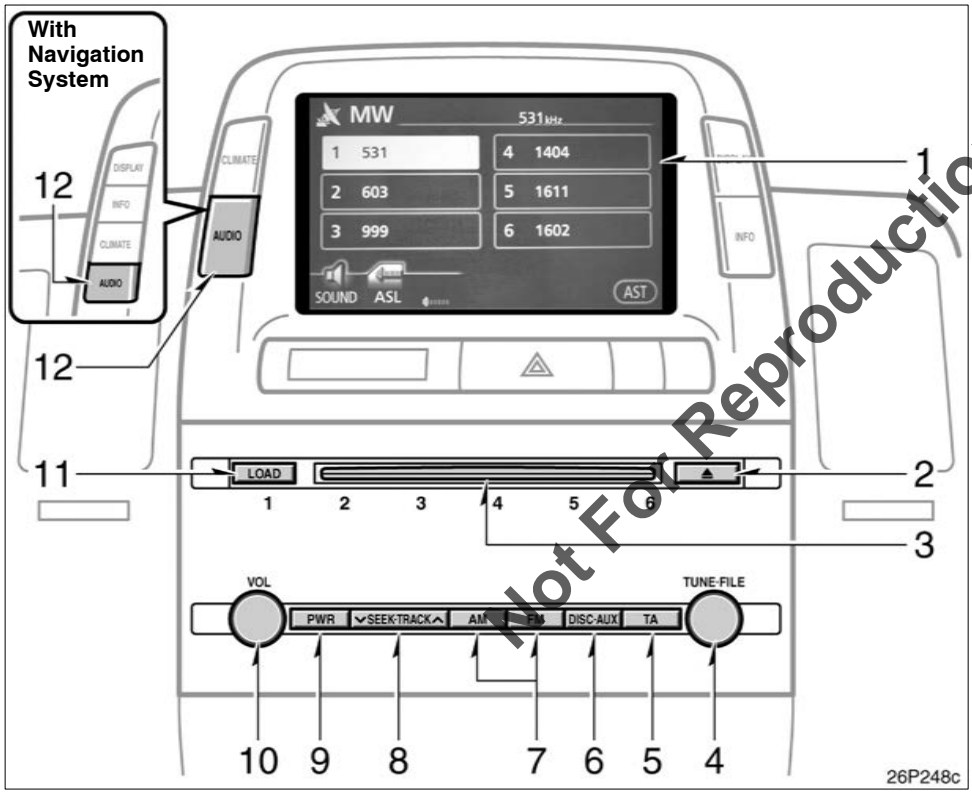

Not For Reproduction

1. Multi–information display screen (See page 154 for details.)
2. Ejecting a compact disc (See page 163 for details.)
3. Compact disc slot (See page 163 for details.)
4. Frequency tuning and file search (See page 158 and 171 for details.)
5. Scan tuning (See page 160 for details.)
6. Compact disc or AUX adapter mode button (See page 164 for details.)
7. Radio mode button (See page 158 for details.)
8. Radio mode: Seek tuning (See page 160 for details.)
   Compact disc mode: Direct access to a desired program (See page 168 for details.)
9. Turning the system on (See page 153 for details.)
10. Adjusting the volume (See page 153 for details.)
11. Compact disc load button (See page 163 for details.)
12. Audio operation screen display button (See page 154 for details.)

▶**Type 2**

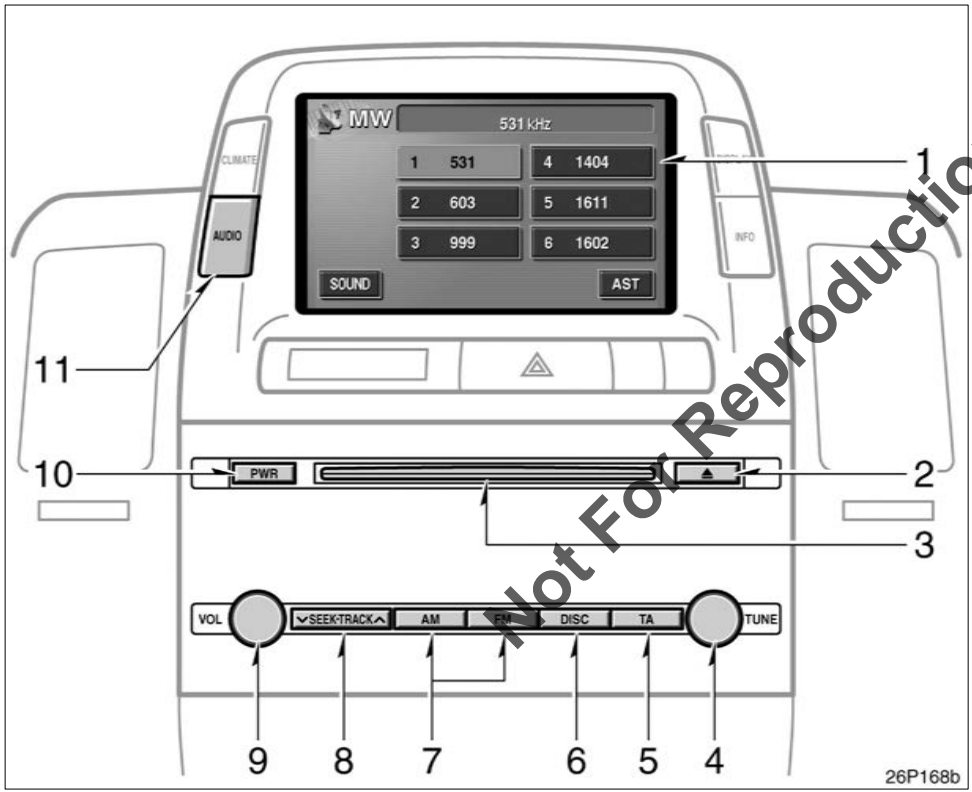

Not For Reproduction

1. Multi–information display screen (See page 154 for details.)
2. Ejecting a compact disc (See page 168 for details.)
3. Compact disc slot (See page 168 for details.)
4. Frequency tuning (See page 158 for details.)
5. Scan tuning (See page 160 for details.)
6. Compact disc mode button (See page 168 for details.)
7. Radio mode button (See page 158 for details.)
8. Radio mode: Seek tuning (See page 160 for details.)
   Compact disc mode: Direct access to a desired program (See page 168 for details.)
9. Adjusting the volume (See page 153 for details.)
10. Turning the system on (See page 153 for details.)
11. Audio operation screen display button (See page 154 for details.)

Using your audio system— —Some basics

This section describes some of the basic features of the Toyota audio system. Some information may not pertain to your system.

Your audio system works when the hybrid system is in “ACC” or “IG–ON”.

NOTICE
To prevent the battery from being discharged, do not leave the audio on longer than necessary when the hybrid system is not running.

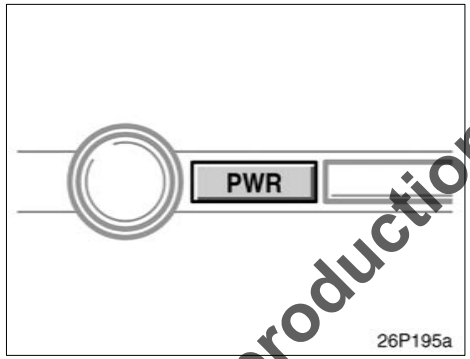

Type 1

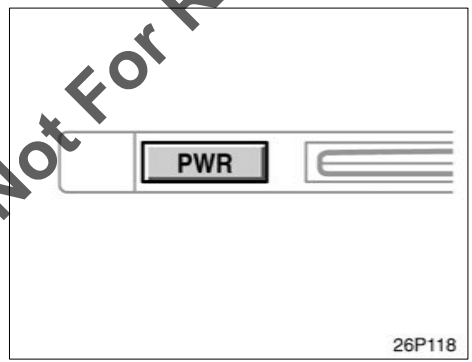

Type 2

Not For Reproduction

TURNING THE SYSTEM ON AND OFF

Push “PWR” button to turn the audio system on and off. The system turns on in the last mode used.

VOLUME CONTROL

To adjust the volume, push and turn the "VOL".

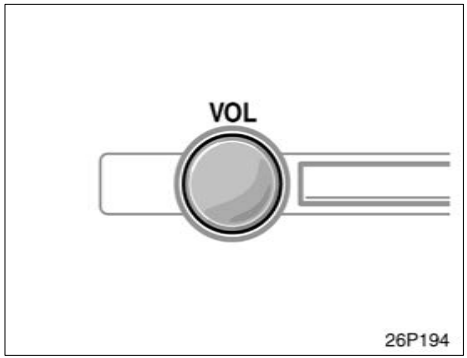

Type 1

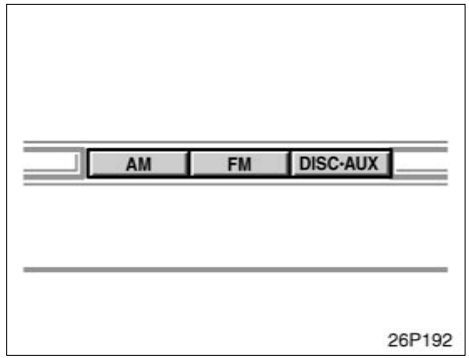

Type 1

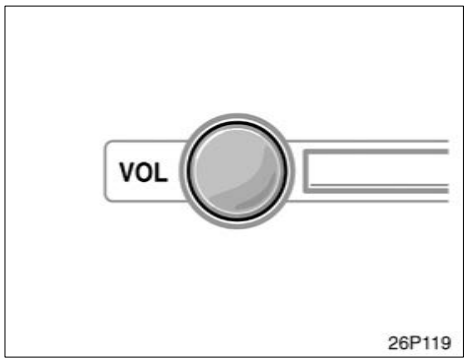

Type 2

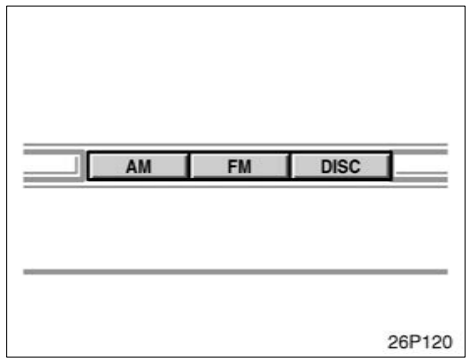

Type 2

Not For Reproduction

Push the “AM”, “FM”, “DISC” or “DISC·AUX” button to turn on that mode. The selected mode turns on directly.

Push these buttons if you want to switch from one mode to another.

If the disc is not set, the compact disc player does not turn on.

Radio (Type 1)

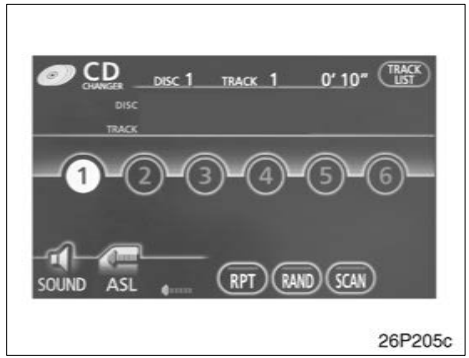

Compact disc (Type 1)

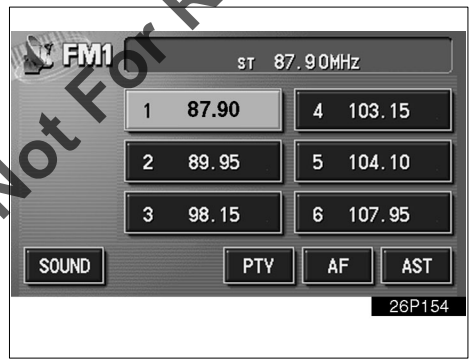

Radio (Type 2)

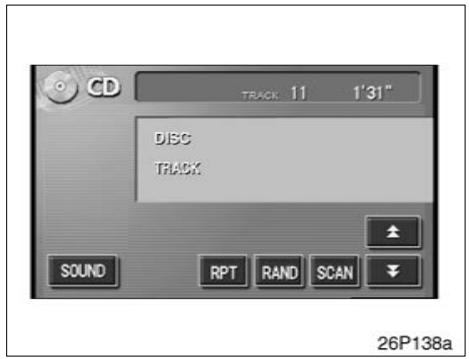

Compact disc (Type 2)

Not For Reproduction

The switches for radio and compact disc player operation are displayed on the liquid crystal display. Touch them lightly and directly on the screen.

The selected switch is highlighted in green.

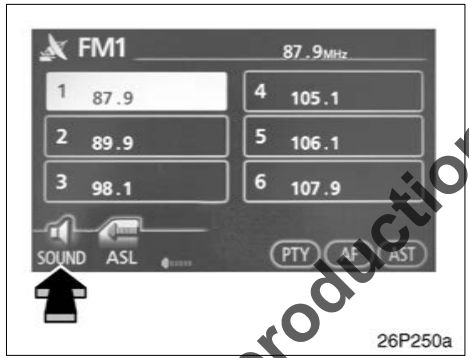

TONE AND BALANCE

Touching the "SOUND" switch on the screen displays the sound adjustment screen.

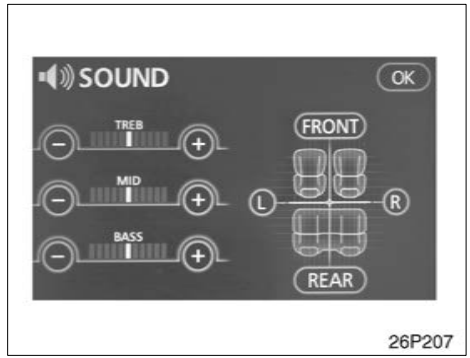

TREB "+" or "–": Adjusts high–pitched tones.

MID "+" or "–" (Type 1 only): Adjusts mid–pitched tones.

BASS "+" or "–": Adjusts low–pitched tones.

"FRONT" or "REAR": Adjusts sound balance between the front and rear speakers.

"L" or "R": Adjusts sound balance between the left and right speakers.

"OK": The previous screen returns.

Not For Reproduction

How good an audio program sounds to you is largely determined by the mix of the treble, mid–range and bass levels. In fact, different kinds of music and vocal programs usually sound better with different mixes of treble, mid–range, and bass.

A good balance of the left and right stereo channels and of the front and rear sound levels is also important.

Keep in mind that if you are listening to a stereo recording or broadcast, changing the right/left balance will increase the volume of one group of sounds while decreasing the volume of another.

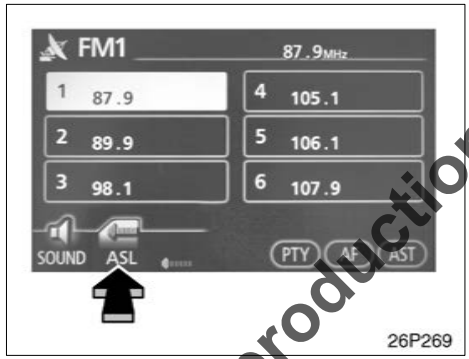

AUTOMATIC SOUND LEVELIZER (ASL) (Type 1 only)

When the audio sound becomes difficult to be heard due to road noise, wind noise, etc. during driving, the system adjusts to the optimum volume and tone quality according to the noise level.

Touch the “ASL” switch.

When the system is on, the sound adjustment level is displayed on the screen.

Not For Reproduction

YOUR RADIO ANTENNA

To remove an antenna on the roof, carefully turn it counterclockwise.

NOTICE

To prevent damage to the antenna, make sure to remove it before driving your Toyota through an automatic car wash.

YOUR COMPACT DISC PLAYER

When you insert a disc, gently push it in with the label side up.

The discs set in the player are played continuously, starting with disc number 1. The disc number of the disc currently being played, the track number and the time from the beginning of the program appear on the display.

Type 1 only
When play of one disc ends, the first track of the following disc starts. When play of the final disc ends, play of the first disc starts again.

The player will skip any empty disc number.

Not For Reproduction

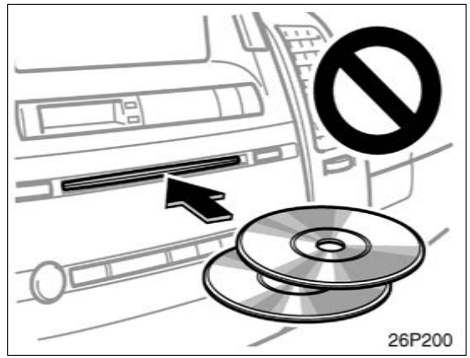

NOTICE

- ***Do not stack up two discs for insertion, or it will cause damage the compact disc player. Insert only one compact disc into slot at a time.***
- ***Never try to disassemble or oil any part of the compact disc player. Do not insert anything other than compact discs into the slot.***

The player is intended for use with 12 cm (4.7 in.) discs only.

Radio operation

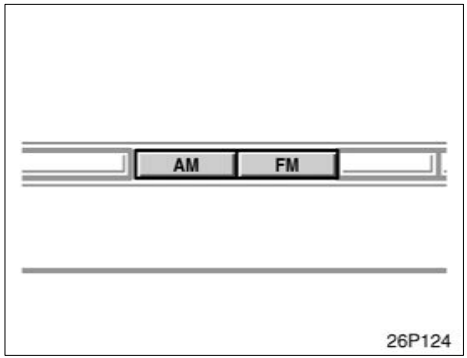

(a) Listening to the radio

Push these buttons to choose either an MW or FM station.

“MW”, “FM1”, “FM2” or “FM3” appears on the display.

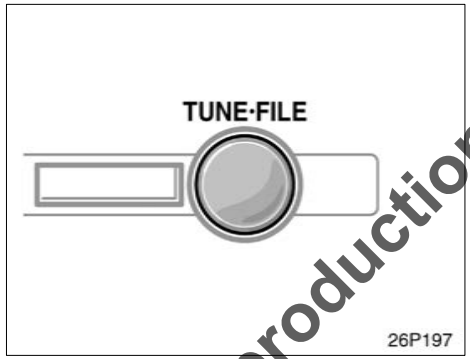

Type 1

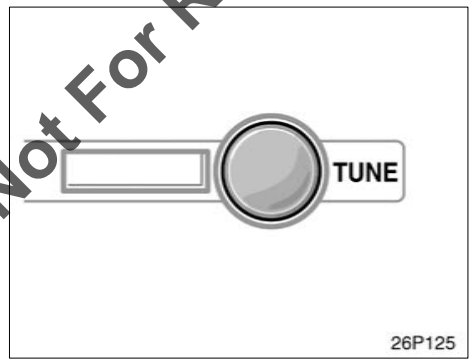

Type 2

Push and turn this knob to step up the station band or to step down.

Your radio automatically changes to stereo reception when a stereo broadcast is received. “ST” appears on the display. If the signal becomes weak, the radio reduces the amount of channel separation to prevent the weak signal from creating noise. If the signal becomes extremely weak, the radio switches from stereo to mono reception. In this case, “ST” disappears from the display.

Not For Reproduction

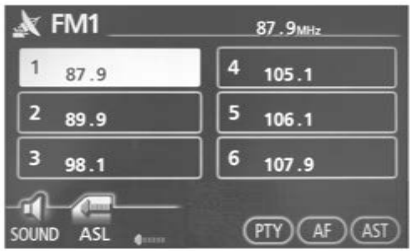

26P268

Type 1

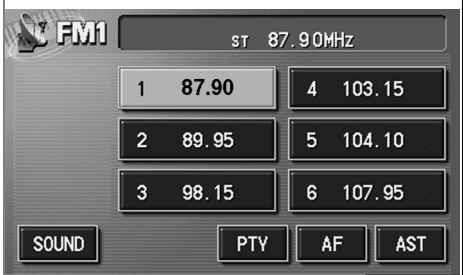

26P156

Type 2

(b) Presetting a station

1. **Tune in the desired station.**
2. **Touch one of the station selector switches (1–6) and hold it until a beep is heard. This sets the station to the switch and the frequency appears on the switch.**

Each switch can store MW, FM1, FM2 and FM3. To change the preset station to a different one, follow the same procedure.

The preset station memory is cancelled when the power source is interrupted by battery disconnection or a blown fuse.

Not For Reproduction

AUTOMATICALLY PRESET

AST (Autostore)

This switch is used to automatically preset frequencies of up to 6 radio stations for each band (MW and FM). Touch the “AST” switch until a beep is heard. To cancel it, touch the switch again.

If you use the “AST” switch in the FM mode (FM1, FM2, FM3), it will be automatically stored in FM3. For example, even if you autostore in FM1, the mode will change to FM3.

If the radio cannot seek out any stations, it will receive the frequency before you operate “AST”.

(c) Selecting a station

Tune in the desired station using one of the following methods.

Preset tuning: Touch the switch (1–6) for the station you want. The switch (1–6) is highlighted in green and station frequency appears on the display.

Manual tuning: Turn the “TUNE·FILE” and “TUNE” knob briefly. Each time you turn the knob, the radio will step up or down to another frequency.

Seek tuning: Push the “SEEK·TRACK” button on either side. The radio will begin seeking up or down for a station of the nearest frequency and will stop on reception. Each time you push the button, the stations will be searched out one after another.

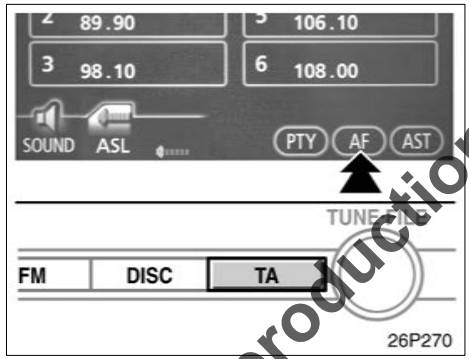

Type 1

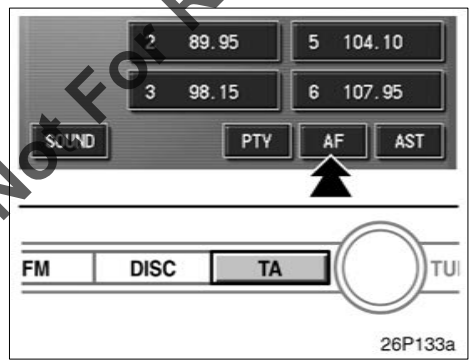

Type 2

(d) RDS (Radio Data System)

This function can be operated only when the RDS station is received.

(1) AF (Alternative Frequency) function:

A station providing good reception is automatically selected if current reception worsens.

Each touch of “AF” switch changes as in the following:

AF–ON, REG–OFF mode: “AF” appears on the display. For switching over to the broadcasting station providing good reception within the same RDS network; convenient for following the appropriate stations in a wide region.

AF–ON, REG–ON mode: “AF” and “REG” appear on the display. For switching over to a broadcasting station within the same local program network.

AF–OFF, REG–OFF mode: The AF function does not work.

Not For Reproduction

TA (Traffic Announcement) function: A station that regularly broadcasts traffic information is automatically located and broadcast when the program starts.

When receiving FM:

Push the “TA” button. The TP mode turns on and “TP” appears on the display.

In the TP mode, the radio will begin seeking a TP station after 20 seconds. “TP SEEK” appears on the display. When a TP station is received, the program service name will appear on the display.

If the radio cannot seek out a TP station, “NOTHING” will appear on the display for 2 seconds and the radio will receive the frequency before you operate “TA”. If you need to seek again, push “SEEK” button.

Push the “TA” button in the “TP” mode. The TA mode turns on and “TA” appears on the display. At this time, FM broadcast is muted.

In the TA mode, the radio will begin seeking a TP station. When a TP station is received, the program service name will appear on the display.

If the radio cannot seek out a TP station, “NOTHING” will appear on the display for 2 seconds and the radio will begin seeking again after 20 seconds.

EON (Enhanced Other Network) system—If the RDS station (with EON data) you are listening to is not broadcasting a traffic information program in the TP mode, the radio will be switched to the traffic information program automatically by using the EON AF list. After the traffic information ends, the radio will return to the initial program automatically. One beep will sound to tell you when this feature starts and ends operation.

When listening to a CD:

With the “TA” button pushed in the “CD” mode, a station broadcasting traffic information is sought and “TA” appears on the display.

When the traffic information program starts, the “CD” mode is interrupted and the traffic information is automatically broadcasted. When the program ends, the initial operation resumes.

Not For Reproduction

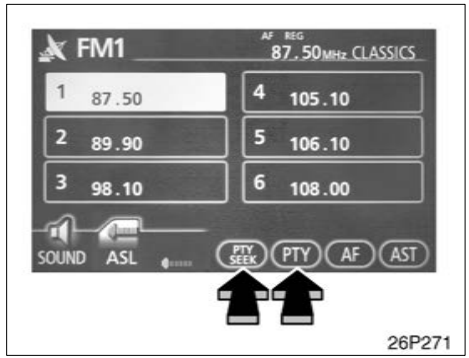

Type 1

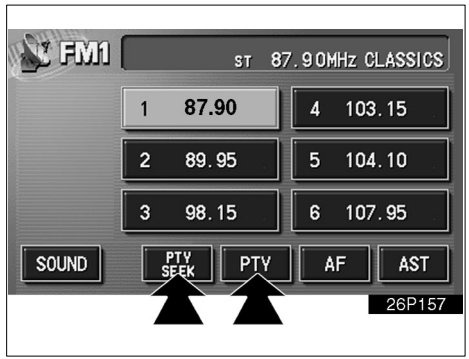

Type 2

(2) PTY (Program Type)

The frequency, program service name and program type appear on the display during receiving from the RDS station.

When you touch “PTY” with the program type shown on the display, the letters of the program type turns green. When you touch “PTY” again, the program type changes to NEWS, SPORTS, TALK, POP and CLASSICS in this order. When you touch “PTY SEEK”, the radio seeks an RDS station for the relevant program type. On reception of the program, you can listen to the broadcasting program. If the radio cannot receive any RDS station, “NOTHING” and then the program type currently being received appear on the display.

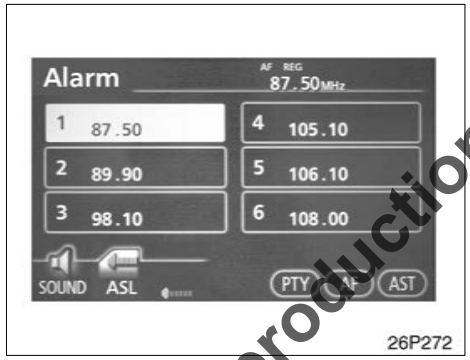

Type 1

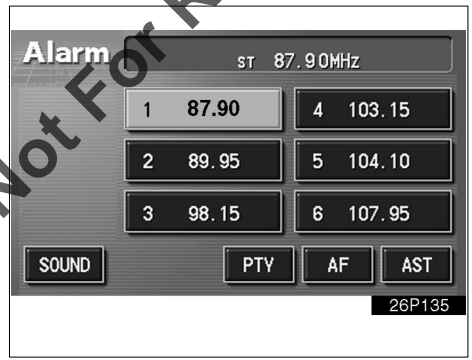

Type 2

(3) Emergency broadcasts

If an emergency broadcast is received during FM broadcasting or playing back of a cassette tape or CD, “Alarm” appears on the display and the current program will be interrupted by the emergency broadcast.

Not For Reproduction

Compact disc player operation (Type 1)

(a) Inserting or ejecting compact disc

- **Setting a single compact disc:**

1. Push the "LOAD" button briefly.

The amber indicators at both ends of the slot blinking. The amber blinking indicators change to continuous green illumination.

2. Insert only one disc.

You can set a disc at the lowest empty disc number.

After insertion, the set disc is automatically loaded.

If the label faces down, the disc cannot be played. In this case, "CD CHECK" appears on the display.

If you need to insert the next disc, repeat the same procedure to insert another disc.

- **Setting all the discs:**

1. Push the "LOAD" button until you hear a beep.

The amber indicators at both ends of the slot blinking. The amber blinking indicators change to continuous green illumination.

2. Insert only one disc.

The amber indicators blink.

3. Insert the next disc after the amber blinking indicators change to continuous green illumination.

4. Repeat this procedure until you insert all the discs.

To cancel the operation, push the "LOAD" button.

Your automatic changer can store up to 6 discs.

If you do not insert the discs within 15 seconds after pushing the "LOAD" button, the operation will be canceled automatically.

NOTICE
Do not insert one disc stacked on top of another one or feed them in continuously, to prevent discs from getting stuck in the player.

Not For Reproduction

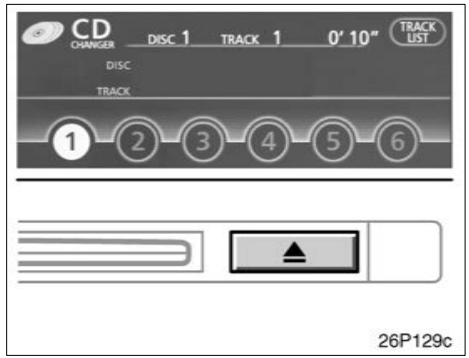

- **Ejecting a single alone:**

1. Touch the switch (1–6) to highlight the disc number you want to eject.

2. Push the "⏏" button for the compact disc briefly.

At this time, the amber indicators of the slot start blinking.

- **Ejecting all the discs:**

Push the "⏏" button for the compact disc until you hear a beep.

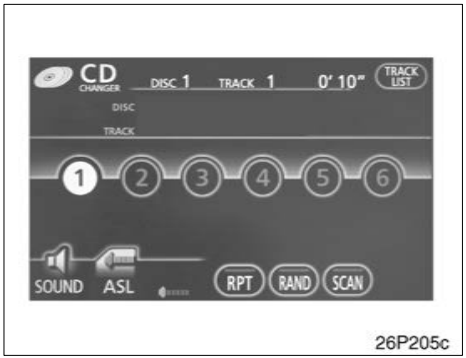

The numbers of the trays where the compact disc is not set are dimmed.

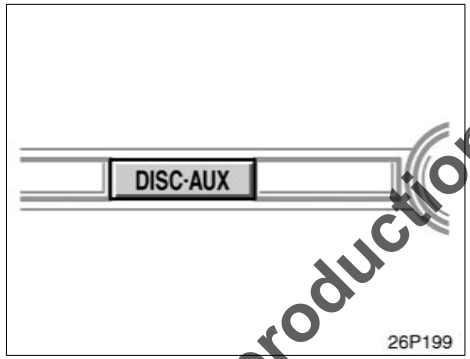

(b) Playing a compact disc

Push the "DISC·AUX" button if the disc is already loaded in the player.

"CD CHANGER" appears on the display.

The discs set in the player are played continuously, starting with the last disc you inserted. The disc number of the disc currently being played, the track number and the time from the beginning of the program are shown on the display.

When play of one disc ends, the first track of the following disc starts. When play of the final disc ends, play of the first disc starts again.

The player will skip any empty disc trays.

When the AUX adapter is in use, each time you push the "DISC·AUX" button, the audio switches the compact disc mode and AUX mode alternately. For details about AUX adapter, see page 204.

Not For Reproduction

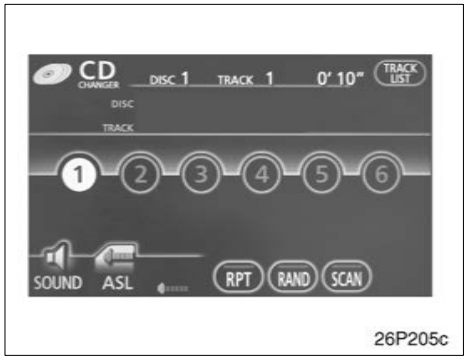

(c) Selecting a desired disc

Touch the desired disc number.

The selected disc number is highlighted in green.

The player will start playing the selected disc from the first track.

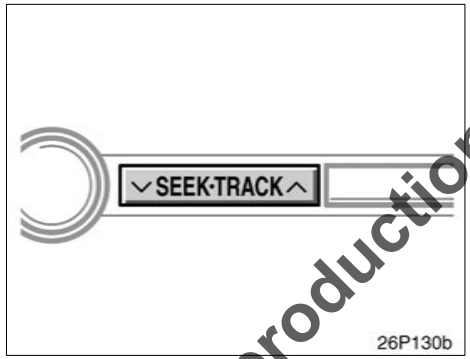

(d) Selecting a desired track

"SEEK·TRACK" button:

Push the "SEEK·TRACK" button. The player will start playing the selected track from the beginning.

Track list screen:

Touch the desired track displayed on the track list screen.

The track list screen cannot be displayed while driving.

For details about the track list screen, see "Displaying the track list" on page 167.

(e) Fast Forward/Reverse

Push the "SEEK·TRACK" button and hold it to fast forward/reverse the disc. When you release the switch, the player will resume playing.

When fast forwarding, if you reach the end of the final track, the player will go back to the start track and continue operation.

When reversing, if you reach the beginning of the start track, reverse is cancelled, even if you continue to hold down the button.

Not For Reproduction

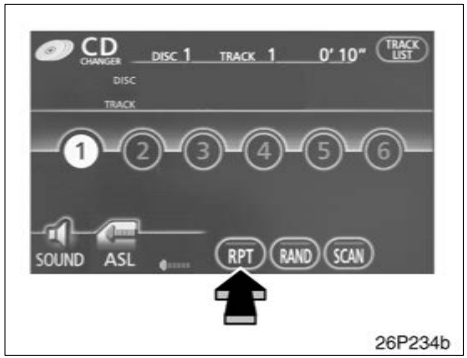

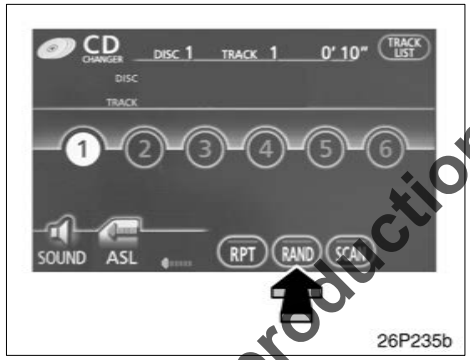

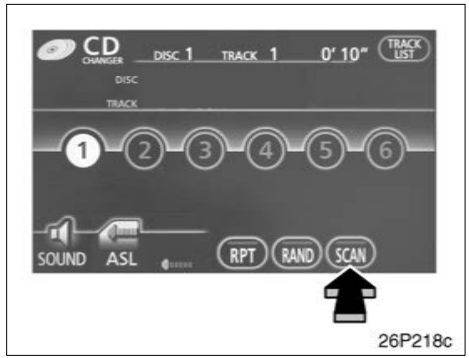

(f) Repeating the same track

Touch the “RPT” switch briefly. When the track is finished, the player will automatically go back to the beginning of the track and play the track again. To cancel it, touch the “RPT” switch once again.

(g) Repeating the same disc

Touch the “RPT” switch and hold it until you hear a beep. When the disc is finished, the player will automatically go back to the beginning of the disc and play the disc again. To cancel it, touch the “RPT” switch once again.

(h) Listening to the tracks in the disc you are listening to, in random order

Touch the “RAND” switch briefly, the system selects a track in the disc you are currently listening to. To cancel it, touch the “RAND” switch once again.

(i) Listening to the tracks in all the discs set, in random order

Touch the “RAND” switch and hold it until you hear a beep, the system selects a track in all the discs which are set and plays it. To cancel it, touch the “RAND” switch once again.

(j) Searching for a desired track

Touch the “SCAN” switch briefly, the player will play the next track for 10 seconds, then scan again. To select a track, touch the “SCAN” switch a second time.

After all the tracks are scanned in one pass, normal play resumes.

(k) Searching for a desired disc

Touch the “SCAN” switch and hold it until you hear a beep, the track at the beginning of each disc will be played for 10 seconds. To continue listening to the track of your choice, touch the “SCAN” switch a second time.

Not For Reproduction

After all the discs are scanned in one pass, normal play resumes.

(l) Displaying the track list

Touch the "TRACK LIST" switch.

The track list screen will be displayed.

If there are more than 6 tracks, touch "▲" or "▼" to change the page.

If you touch a track, that track will be played.

Only track names of 13 characters or less can be displayed. Furthermore, track names may not be displayed correctly or at all, depending on the recorded content.

(m) If the player malfunctions

If the player or another unit equipped with the player malfunctions, your audio system will display the following error messages.

If "CD CHECK" appears on the display, it indicates that the disc is dirty, damaged or it was inserted up side down. Clean the disc or insert it correctly.

If "CD ERROR" appears on the display, the following causes are possible.

- There is trouble inside the system. Eject the disc.
- The inside of the player unit may be too hot due to the very high ambient temperature. Eject the disc and allow the player to cool down.

If the malfunction is not rectified, take your vehicle to your Toyota dealer.

Not For Reproduction

Compact disc player operation (Type 2)

(a) Inserting or ejecting compact disc

When you insert a disc, the player will automatically start. To eject the disc, push the "⏏" button.

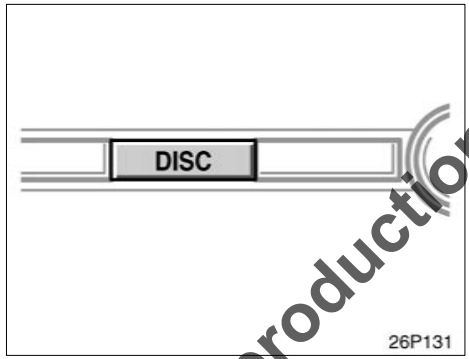

(b) Playing a compact disc

Push the "DISC" button if the disc is already loaded in the player.

"CD" appears on the display.

The discs set in the player are played continuously. The track number and the time from the beginning of the program are shown on the display.

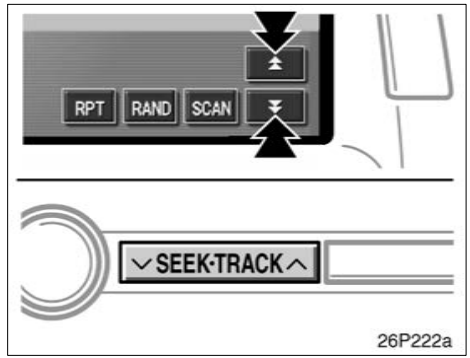

(c) Selecting a desired track

"SEEK·TRACK" button: Use for direct access to a desired track.

Push either side of the "SEEK·TRACK" button. The player will start playing the selected track from the beginning.

Fast forward: Touch the "⏫" switch and hold it to fast forward the disc. When you release the switch, the compact disc player will resume playing from that position.

Reverse: Touch the "⏬" switch and hold it to reverse the disc. When you release the switch, the compact disc player will resume playing.

Not For Reproduction

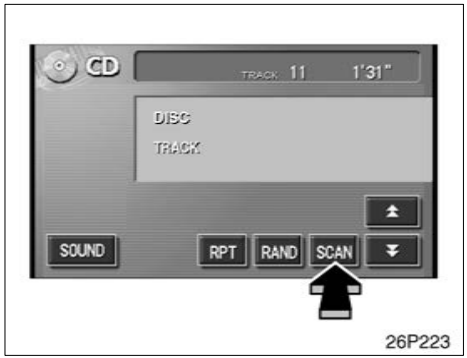

(d) Searching for a desired track

Touch the "SCAN" switch.

"SCAN" will be highlighted in green. The compact disc player will play the next track for 10 seconds, then scan again. To select a track, touch the "SCAN" switch a second time. If the player reaches the end of the disc, it will continue scanning at track 1.

After all the tracks are scanned in one pass, normal play resumes.

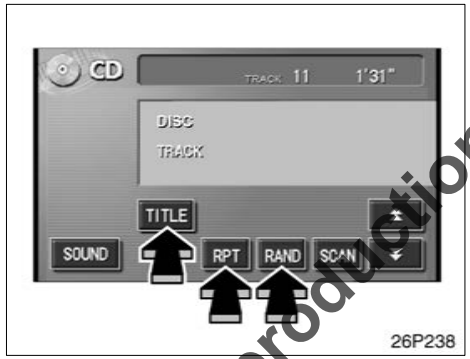

(e) Other compact disc player functions

"RPT" switch: Use it for automatic repeat of the track you are currently listening to.

Touch the switch while the track is playing. When the track is finished, the player will automatically go back to the beginning of the track and play the track again. To cancel it, touch the switch once again.

"RAND" switch: Use it for automatic and random selection of the disc which you are currently listening to.

When the switch is touched, the system selects a track in the disc you are currently listening to. To cancel it, touch the switch once again.

"TITLE" switch: Use it for displaying the disc and track title while the CD–TEXT disc is playing.

The switch is not displayed on the screen while the CD–TEXT disc is not playing. Up to 29 letters can be displayed. To cancel it, touch the "TITLE OFF" switch.

Not For Reproduction

(f) If the player malfunctions

If the player or another unit equipped with the player malfunctions, your audio system will display the following error messages.

If "CD CHECK" appears on the display, it indicates that the disc is dirty, damaged or it was inserted up side down. Clean the disc or insert it correctly.

If "CD ERROR" appears on the display, the following causes are possible.

- There is trouble inside the system. Eject the disc.
- The inside of the player unit may be too hot due to the very high ambient temperature. Eject the disc and allow the player to cool down.

If the malfunction is not rectified, take your vehicle to your Toyota dealer.

MP3/WMA player operation

(a) Inserting or ejecting MP3/WMA disc

Refer to the "(a) Inserting or ejecting compact disc" on page 163.

(b) Playing a compact disc

Refer to the "(b) Playing a compact disc" on page 164.

(c) Selecting a desired disc

Refer to the "(c) Selecting a desired disc" on page 165.

Not For Reproduction

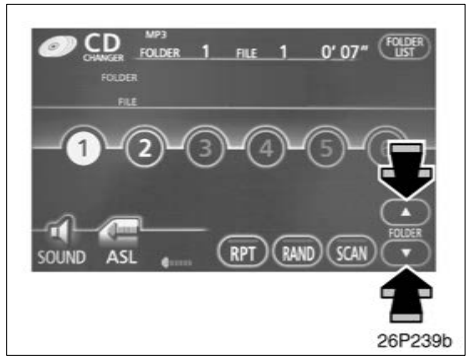

(d) Selecting a desired folder

"FOLDER" switch:

Touch either side of the "FOLDER" switch. The player will start playing the file in the selected folder.

Folder list screen:

Touch the desired folder displayed on the folder list screen.

The folder list screen cannot be displayed while driving.

For details the folder list screen, see "Displaying the folder list" on page 173.

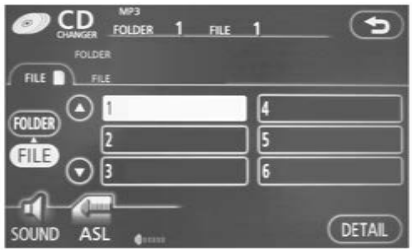

26P240b

(e) Selecting a desired file

"TRACK" button:

Push the "SEEK·TRACK" button. The player will start playing the selected file from the beginning.

File list screen:

Touch the desired file displayed on the file list screen.

The file list screen cannot be displayed while driving.

For details about the file list screen, see "Displaying the file list" on page 173.

"TUNE·FILE" knob:

Turn the knob clockwise to search up the files. Turn the knob counterclockwise to search down the files.

Not For Reproduction

26P130b

(f) Fast Forward/Reverse

Push the "SEEK·TRACK" button and hold it to fast forward/reverse the disc. When you release the switch, the player will resume playing.

When fast forwarding, if you reach the end of the final file, the player will go back to the start file and continue operation.

When reversing, if you reach the beginning of the start file, reverse is cancelled, even if you continue to hold down the button.

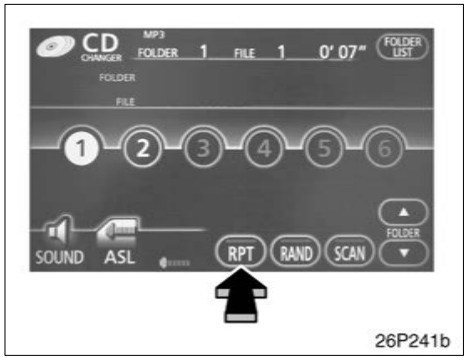

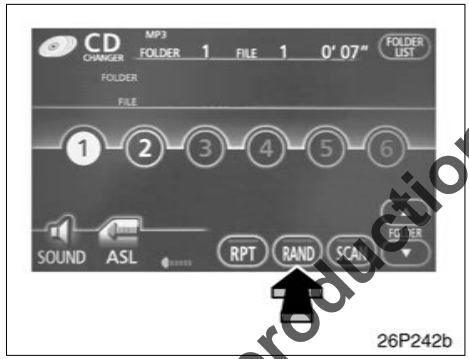

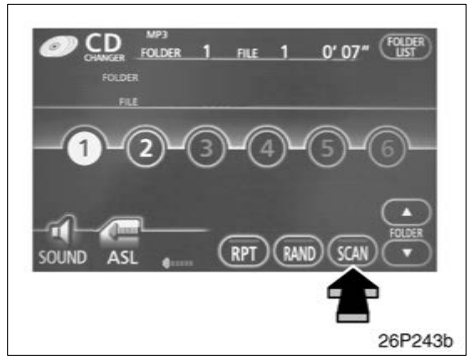

(g) Repeating the same file

Touch the “RPT” switch briefly. When the file is finished, the player will automatically go back to the beginning of the file and play the file again. To cancel it, touch the “RPT” switch once again.

(h) Repeating the same folder

Touch the “RPT” switch and hold it until you hear a beep. When the folder is finished, the player will automatically go back to the beginning of the folder and play the folder again. To cancel it, touch the “RPT” switch once again.

(i) Listening to the files in the folder you are listening to, in random order

Touch the “RAND” switch briefly, the system selects a file in the folder you are currently listening to. To cancel it, touch the “RAND” switch once again.

(j) Listening to the files in all the folders, in random order

Touch the “RAND” switch and hold it until you hear a beep, the system selects a file in all the folders which are set and plays it. To cancel it, touch the “RAND” switch once again.

(k) Searching for a desired file

Touch the “SCAN” switch briefly, the player will play the next file for 10 seconds, then scan again. To select a file, touch the “SCAN” switch a second time.

After all the files are scanned in one pass, normal play resumes.

(l) Searching for a desired folder

Touch the “SCAN” switch and hold it until you hear a beep, the file at the beginning of each folder will be played for 10 seconds. To continue listening to the file of your choice, touch the “SCAN” switch a second time.

After all the folders are scanned in one pass, normal play resumes.

Not For Reproduction

26P244b

(m) Displaying the folder list

Touch the "FOLDER LIST" switch.

The folder list screen will be displayed.

If there are more than 6 folders, touch "▲" or "▼" to change the page.

If you touch a folder, that folder will be played.

Up to 13 characters of folder name can be displayed. However, folder names may not be displayed correctly or at all, depending on the recorded content.

If you touch the "FILE" switch, the file list screen will be displayed.

26P245b

(n) Displaying the file list

Touch the "FILE" switch.

The file list screen will be displayed.

If there are more than 6 files, touch "▲" or "▼" to change the page.

If you touch a file, that file will be played.

Up to 13 characters of file name can be displayed. However, file names may not be displayed correctly or at all, depending on the recorded content.

If you touch the "FOLDER" switch, the folder list screen will be displayed.

26P246b

(o) Displaying the file information

Touch the "DETAIL" switch on the folder list or file list screen.

Up to 32 characters of album title, track, artist's name or music genre can be displayed. However, some information may not be displayed correctly or at all, depending on the recorded content.

Not For Reproduction

(p) If the player malfunctions

If the player or another unit equipped with the player malfunctions, your audio system will display the following error messages.

If "CD CHECK" appears on the display, it indicates that the disc is dirty, damaged or it was inserted up side down. Clean the disc or insert it correctly.

If "CD ERROR" appears on the display, the following causes are possible.

- There is trouble inside the system. Eject the disc.
- The inside of the player unit may be too hot due to the very high ambient temperature. Eject the disc and allow the player to cool down.

If "NO DATA DISC" appears on the display, it indicates that a disc with no MP3 or WMA data has been inserted. Remove the disc from the player and insert a MP3 or WMA data disc.

If the malfunction is not rectified, take your vehicle to your Toyota dealer.

Audio remote controls (steering switches)

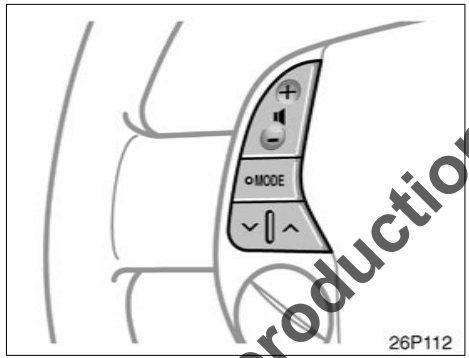

The switches are installed on the left side of the steering pad.

"MODE" switch: Use this switch to change the mode. If a compact disc is not inserted, the "CD" mode is skipped. When you push the switch with the audio system turned off, the audio system turns on.

"🔈" switches: Use the switches to adjust the volume. Push "+" to increase the volume and "–" to decrease the volume. The volume continues to increase or decrease while the switch is being pressed.

(a) When the radio mode is selected

"∧" or "∨" switch: Push this switch for seek tuning or to select a station.

- To select a preset station, push the switch briefly. Do this again to select the next preset station.
- To seek a station, push and hold the switch until you hear a beep. Do this again to find the next station. If you push the switch on either side ("∨" or "∧") during the seek mode, seeking will be canceled.
- To step up or down the frequency, push and hold the switch even after you hear a beep. When you release from the switch, the radio will begin seeking up or down for a station. Do this again to find the next station.

Not For Reproduction

(b) When the "CD" mode is selected

"∧" or "∨" switch: Use this switch to select a desired track or disc.

- Push this switch briefly to select a desired track.
- To select a desired disc, push and hold this switch until the desired number of the disc appears and you hear a beep.

(c) When the "MP3/WMA" mode is selected

"∧" or "∨" switch: Use this switch to select a desired file or folder.

- Push this switch briefly to select a desired file.
- To select a desired folder, push and hold this switch until the desired folder appears and you hear a beep.

⚠ CAUTION

Operate the switches with due care while you are driving to avoid accidents.

NOTICE

To ensure correct audio system operations:

- ***Be careful not to spill beverages over the audio system.***
- ***The use of a cellular phone inside or near the vehicle may cause a noise from the speakers of the audio system which you are listening to. However, this does not indicate a malfunction.***

RADIO RECEPTION

Usually, a problem with radio reception does not mean there is a problem with your radio—it is just the normal result of conditions outside the vehicle.

For example, nearby buildings and terrain can interfere with FM reception. Power lines or telephone wires can interfere with AM signals. And of course, radio signals have a limited range. The farther you are from a station, the weaker its signal will be. In addition, reception conditions change constantly as your vehicle moves.

Here are some common reception problems that probably do not indicate a problem with your radio:

FM

Fading and drifting stations—Generally, the effective range of FM is about 40 km (25 miles). Once outside this range, you may notice fading and drifting, which increase with the distance from the radio transmitter. They are often accompanied by distortion.

Multi–path—FM signals are reflective, making it possible for two signals to reach your antenna at the same time. If this happens, the signals will cancel each other out, causing a momentary flutter or loss of reception.

Static and fluttering—These occur when signals are blocked by buildings, trees, or other large objects. Increasing the bass level may reduce static and fluttering.

Station swapping—If the FM signal you are listening to is interrupted or weakened, and there is another strong station nearby on the FM band, your radio may tune in the second station until the original signal can be picked up again.

Not For Reproduction

AM

Fading—AM broadcasts are reflected by the upper atmosphere—especially at night. These reflected signals can interfere with those received directly from the radio station, causing the radio station to sound alternately strong and weak.

Station interference—When a reflected signal and a signal received directly from a radio station are very nearly the same frequency, they can interfere with each other, making it difficult to hear the broadcast.

Static—AM is easily affected by external sources of electrical noise, such as high tension power lines, lightening, or electrical motors. This results in static.

CARING FOR YOUR COMPACT DISC PLAYER AND DISCS

- The player is intended for use with 12 cm (4.7 in.) discs only.
- Extremely high temperatures can keep your compact disc player from working. On hot days, use the air conditioning to cool the vehicle interior before you listen to a disc.
- Bumpy roads or other vibrations may make your compact disc player skip.
- If moisture gets into your compact disc player, you may not hear any sound even though your compact disc player appears to be working. Remove the disc from the player and wait until it dries.

⚠ CAUTION

Compact disc players use an invisible laser beam which could cause hazardous radiation exposure if directed outside the unit. Be sure to operate the player correctly.

- Use only compact discs marked as shown above. The following products may not be playable on your compact disc player.

  Copy–protected CD
  CD–R (CD–Recordable)
  CD–RW (CD–Re–writable)
  CD–ROM

Not For Reproduction

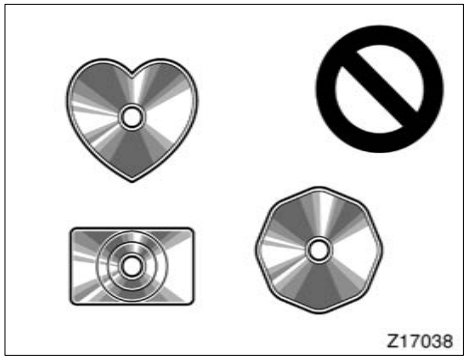

Special shaped discs

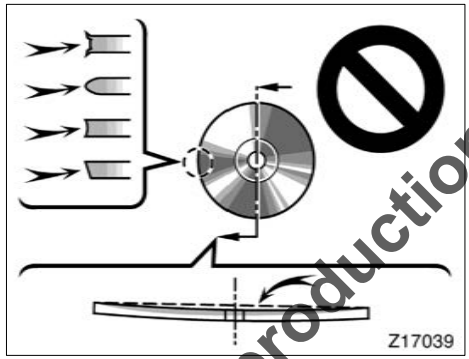

Low quality discs

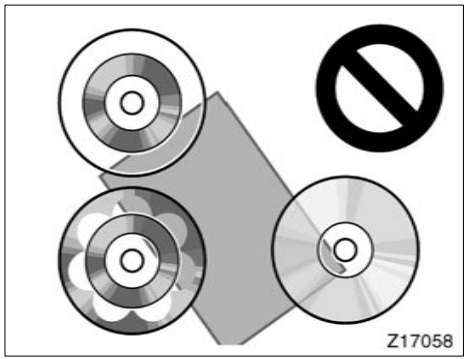

Transparent/translucent discs

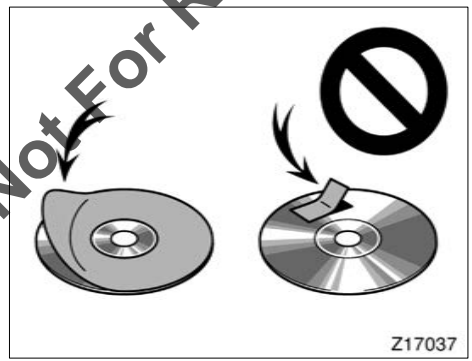

Labeled discs

NOTICE

- ***Do not use special shaped, transparent/translucent, low quality or labeled discs such as those shown in the illustrations. The use of such discs may damage the player or changer, or it may be impossible to eject the disc.***
- ***This system is not designed for use of Dual Disc. Do not use Dual Disc because it may cause damage to the player or changer.***

Not For Reproduction

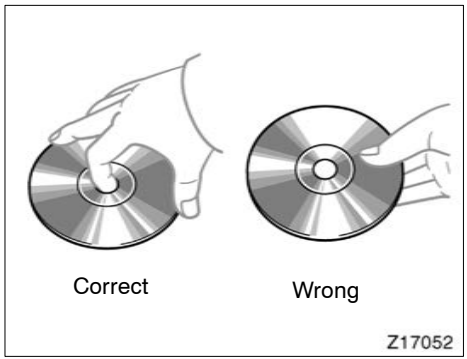

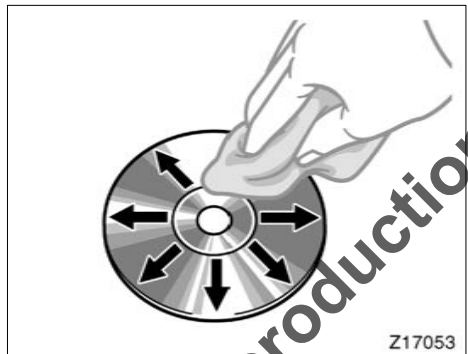

- Handle compact discs carefully, especially when you are inserting them. Hold them on the edge and do not bend them. Avoid getting fingerprints on them, particularly on the shiny side.
- Dirt, scratches, warping, pin holes, or other disc damage could cause the player to skip or to repeat a section of a track. (To see a pin hole, hold the disc up to the light.)
- Remove discs from the compact disc player when you are not listening to them. Store them in their plastic cases away from moisture, heat, and direct sunlight.

To clean a compact disc: Wipe it with a soft, lint–free cloth that has been dampened with water. Wipe in a straight line from the center to the edge of the disc (not in circles). Dry it with another soft, lint–free cloth. Do not use a conventional record cleaner or anti–static device.

Not For Reproduction

MP3 WMA FILES

- MP3 (MPEG Audio Layer 3) and WMA (Windows Media Audio) are audio compression standards.
- The MP3/WMA player can play MP3 and WMA files on CD–ROM, CD–R and CD–RW discs.

  The unit can play disc recordings compatible with ISO 9660 level 1 and level 2 and with the Romeo and Joliet file system.
- When naming an MP3 or WMA file, add the appropriate file extension (.mp3 or .wma)
- The MP3/WMA player plays back files with .mp3 or .wma file extensions as MP3 or WMA files. To prevent noise and playback errors, use the appropriate file extensions.
- Multi–session compatible CDs can also be played.
- MP3 files are compatible with the ID3 Tag Ver. 1.0, Ver. 1.1, Ver. 2.2, and Ver. 2.3 formats. The unit cannot display disc title, track title and artist name in other formats.

- WMA files can contain a WMA tag that is used in the same way as an ID3 tag. WMA tags carry information such as track title, artist name.
- The emphasis function is available only when playing MP3/WMA files recorded at 32, 44.1 and 48 kHz. (The system can play MP3 files with sampling frequencies of 16, 22.05, and 24 kHz. However, the emphasis function is not available for files recorded at these frequencies.)
- The sound quality of MP3/WMA files generally improves with higher bit rates. In order to achieve a reasonable level of sound quality, discs recorded with a bit rate of at least 128 kbps are recommended.

Playable bit rates
MP3 files:
MPEG1 LAYER3—64 to 320 kbps
MPEG2 LSF LAYER3—64 to 160 kbps
WMA files:

Ver. 7, 8 CBR—48 to 192 kbps
Ver. 9 CBR—48 to 320 kbps

- The MP3/WMA player does not play back MP3/WMA files from discs recorded using packet write data transfer (UDF format). Discs should be recorded using “per–mastering” software rather than packet–write software.
- M3u playlists are not compatible with the audio player.
- MP3i (MP3 interactive) and MP3PRO formats are not compatible with the audio player.
- The MP3 player is compatible with VBR (Variable Bit Rate).
- When playing back files recorded as VBR (Variable Bit Rate) files, the play time will not be correctly displayed if fast–forward or reverse operations are used.
- It is not possible to check folders that do not include MP3/WMA files.
- MP3/WMA files in folders up to 8 levels deep can be played. However, the start of playback may be delayed when using discs containing numerous levels of folders. For this reason, we recommend creating discs with no more than two levels of folders.
- It is possible to play up to 192 folders or 255 files on one disc.

Not For Reproduction

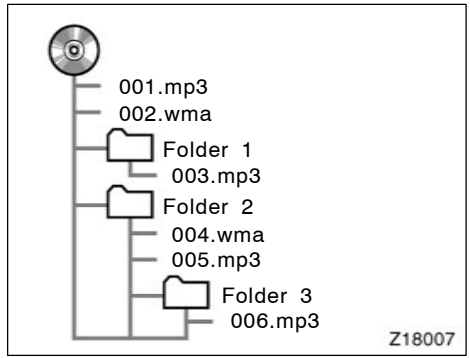

- The play order of the compact disc with the structure shown above is as follows:

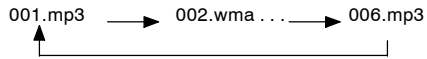

CD–R and CD–RW discs

- CD–R/CD–RW discs that have not been subject to the “finalizing process” (a proc ess that allows discs to be played on a conventional CD player) cannot be played.
- It may not be possible to play CD–R/CD–RW discs recorded on a music CD recorder or a personal computer because of disc characteristics, scratches or dirt on the disc, or dirt, condensation, etc. on the lens of the unit.
- It may not be possible to play discs recorded on a personal computer depending on the application settings and the environment. Record with the correct format. (For details, contact the appropriate application manufacturers of the applications.)
- CD–R/CD–RW discs may be damaged by direct exposure to sunlight, high temperatures or other storage conditions. The unit may be unable to play some damaged discs.
- If you insert a CD–RW disc into the MP3/WMA player, playback will begin more slowly than with a conventional CD or CD–R disc.
- Recordings on CD–R/CD–RW cannot be played using the DDCD (Double Density CD) system.

Not For Reproduction

TERMS

Packet write—

This is a general term that describes the process of writing data on–demand to CD–R, etc., in the same way that data is written to floppy or hard discs.

ID3 Tag—

This is a method of embedding track–related information in an MP3 file. This embedded information can include the track title, the artist’s name, the album title, the music genre, the year of production, comments and other data. The contents can be freely edited using software with ID3 tag editing functions. Although the tags are restricted to the number of characters, the information can be viewed when the track is played back.

WMA Tag—

WMA files can contain a WMA tag that is used in the same way as an ID3 tag. WMA tags carry information such as track title, artist name.

ISO 9660 format—

This is the international standard for the formatting of CD–ROM folders and files. For the ISO 9660 format, there are two levels of regulations.

Level 1:

The file name is in 8.3 format (8 character file names, with a 3 character file extension. File names must be composed of one–byte capital letters and numbers. The "_" symbol may also be included).

Level 2:

The file name can have up to 31 characters (including the separation mark "." and file extension). Each folder must contain fewer than 8 hierarchies.

m3u—

Playlists created using "WINAMP" software have a playlist file extension (.m3u).

MP3—

MP3 is an audio compression standard determined by a working group (MPEG) of the ISO (International Standard Organization). MP3 compresses audio data to about 1/10 the size of that on conventional discs.

WMA—

WMA (Windows Media Audio) is an audio compression format developed by Microsoft. It compresses files into a size smaller than that of MP3 files. The decoding formats for WMA files are Ver. 7, 8, and 9.

Not For Reproduction

Not For Reproduction

OPERATION OF INSTRUMENTS AND CONTROLS

Air conditioning system

Controls 184
Climate remote control 194
Instrument panel vents 194
Air conditioning filter 195

Not For Reproduction

▶Type 1

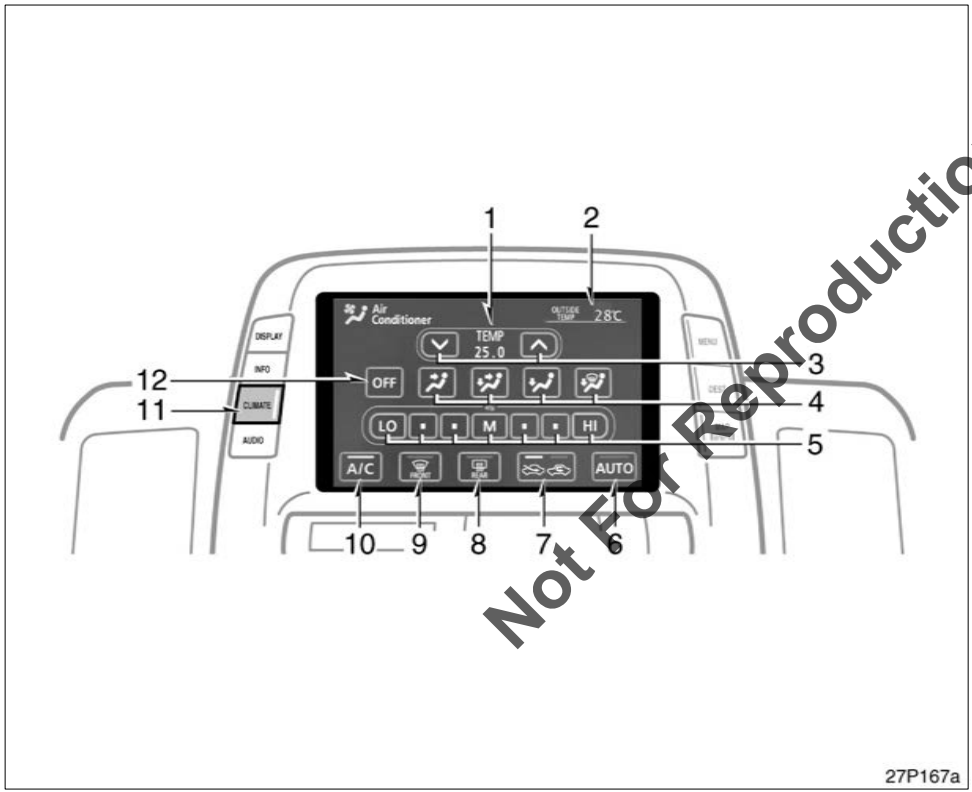

Not For Reproduction

1. Passenger compartment temperature display
2. Outside temperature display
3. Temperature control switches
4. Air flow control switches
5. Fan speed control switches
6. Automatic control switch
7. Air intake control switch
8. Rear window defogger switch (See page 101 for details.)
9. Windshield air flow switch
10. Air conditioning on–off switch
11. Air conditioning operation screen display button
12. OFF switch

▶**Type 2**

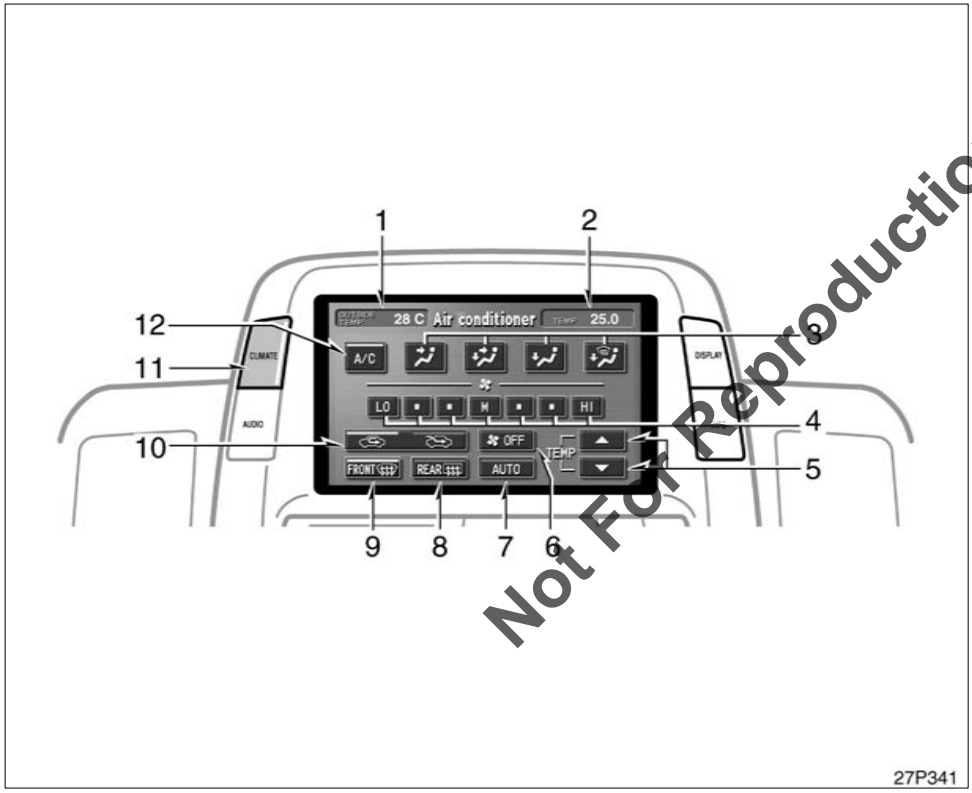

Not For Reproduction

1. Outside temperature display
2. Passenger compartment temperature display
3. Air flow control switches
4. Fan speed control switches
5. Temperature control switches
6. OFF switch
7. Automatic control switch
8. Rear window defogger switch (See page 101 for details.)
9. Windshield air flow switch
10. Air intake control switch
11. Air conditioning operation screen display button
12. Air conditioning on–off switch

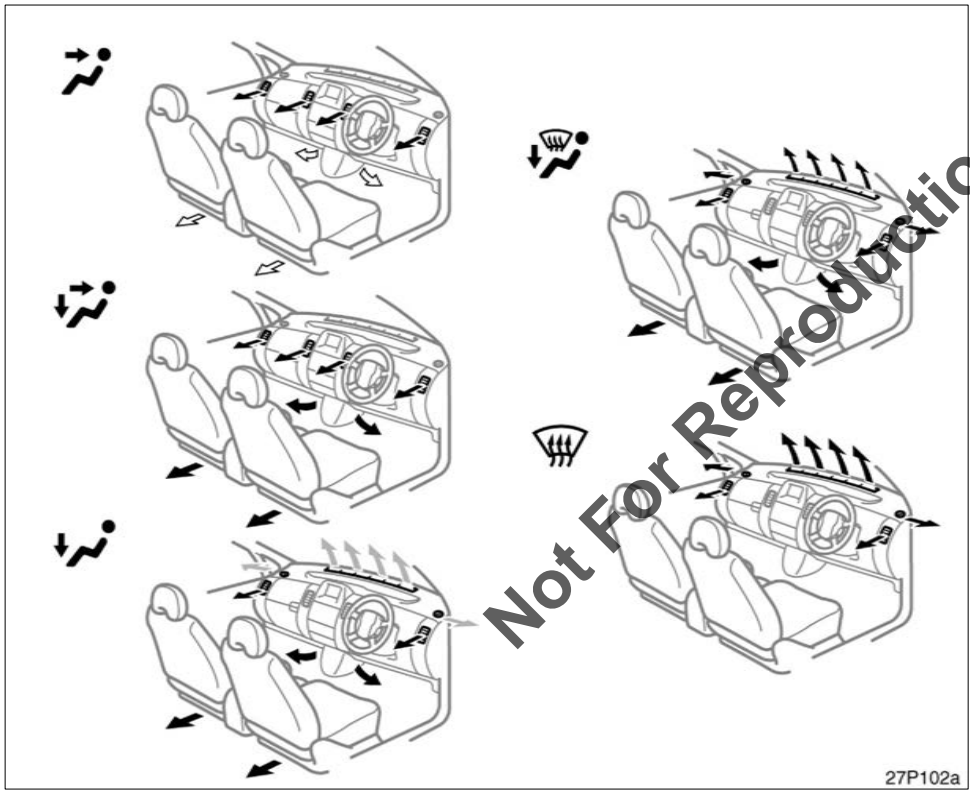

Not For Reproduction

➡ **Automatic air flow mode only**

⇨ **:** In the beginning of the automatic air flow mode, air might be delivered.

The automatic air conditioning automatically maintains the set temperature.

This air conditioning features automatic fan speed and air flow control which automatically selects the most suitable fan speed and air flow to control the temperature. The hybrid system must be in the "IG–ON" mode.

CLIMATE: Push this button to display switches for automatic air conditioning controls.

NOTICE
To prevent the battery from being discharged, do not leave the air conditioning on longer than necessary when the hybrid system is not operating.

(a) Climate control

SETTING OPERATION—automatic control

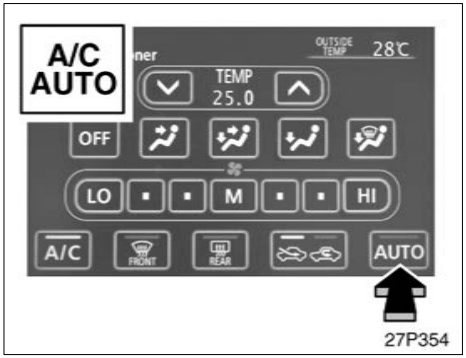

Type 1

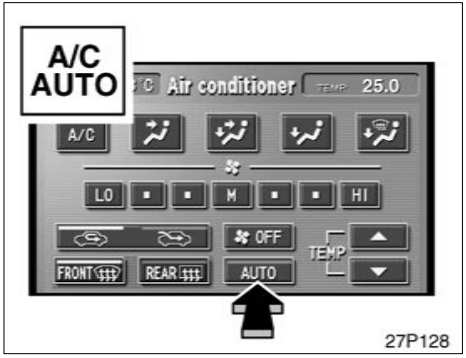

Type 2

1. Touch the "AUTO" switch.

The indicator located in the instrument cluster will come on.

Air conditioning is turned on if not operated.

Air flow quantity, switching of the diffusers, and switching of the air intake between RECIRCULATED AIR and OUTSIDE AIR are automatically adjusted. The operation status is shown by each indicator.

However, if the RECIRCULATED AIR mode is selected manually, automatic control of air intake cannot be activated.

When one of the manual control buttons is depressed while operating in automatic mode, the mode relevant to the depressed button is set. Other conditions continue to be adjusted automatically. However, operating the air flow outlets or fan speed will turn off the automatic control.

Touch the "OFF" switch to turn the air conditioning off.

Not For Reproduction

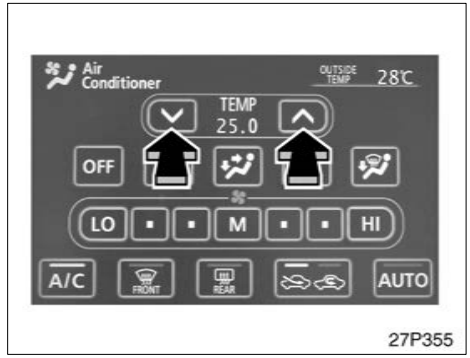

Type 1

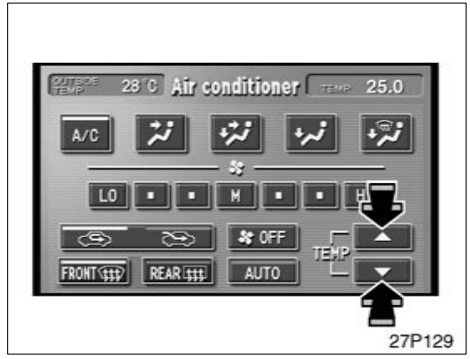

Type 2

2. Use the "TEMP" switch to set the desired temperature.

The temperature of air delivered to the passenger compartment will be controlled automatically according to the setting.

SETTING OPERATION—manual control

When one of the manual control switches is touched while operating in automatic mode, the mode relevant to the touched switch is set. Other conditions continue to be adjusted automatically.

If manual air flow selection is desired—

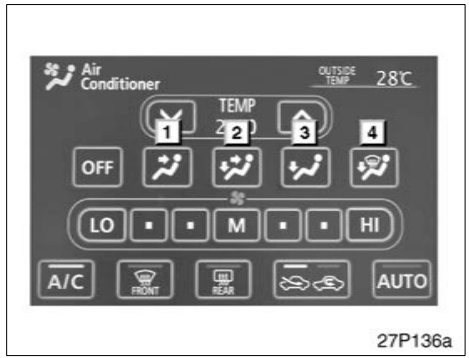

Type 1

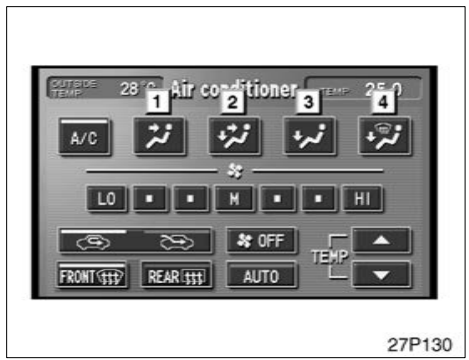

Type 2

Not For Reproduction

The outlets from which air is delivered can be selected manually by touching the switch. The function of each mode is as follows:

1. **Panel—**Air flows mainly from the instrument panel vents.
2. **Bi-level—**Air flows from both the floor vents and the instrument panel vents.
3. **Floor—**Air flows mainly from the floor vents.
4. **Floor/Windshield—**Air flows mainly from the floor vents and windshield vents.

The selected mode is highlighted in green.

If quick heating or cooling is desired—

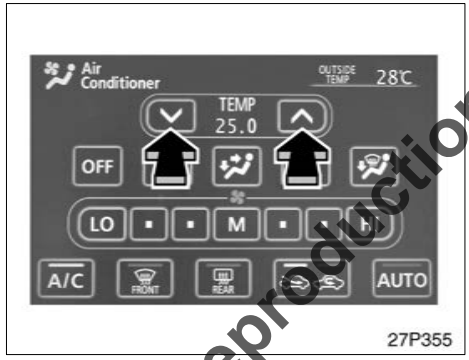

Type 1

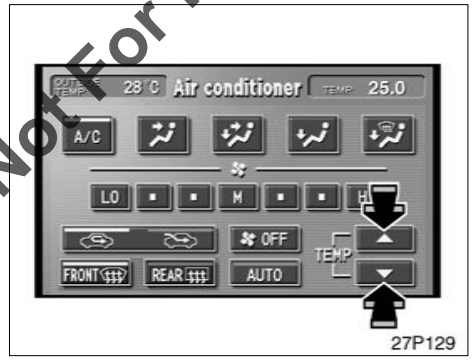

Type 2

Touch the “TEMP” switch and hold it until the maximum figure or minimum figure appears.

Not For Reproduction

If manual fan speed control is desired—

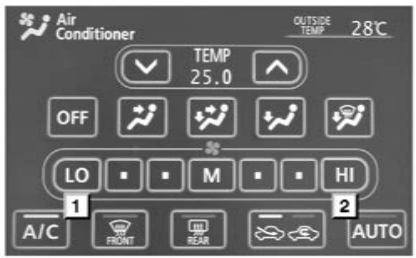

27P356

Type 1

27P131

Type 2

1. Fan speed at low
2. Fan speed at high

The fan speed can be set to your desired speed by touching the appropriate air flow control switch. The higher the fan speed is, the more air is delivered. Touching the "OFF" switch turns off the fan.

To remove exterior windshield frost, use the high speed setting.

The selected mode is highlighted in green.

Not For Reproduction

If manual switching of air intake is desired—

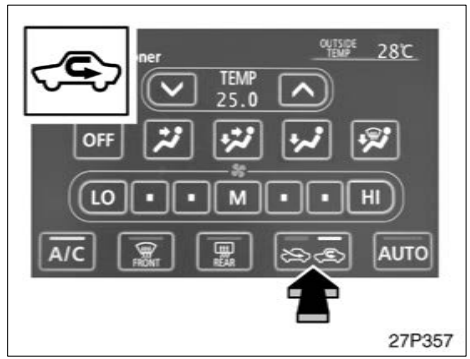

27P357

Type 1

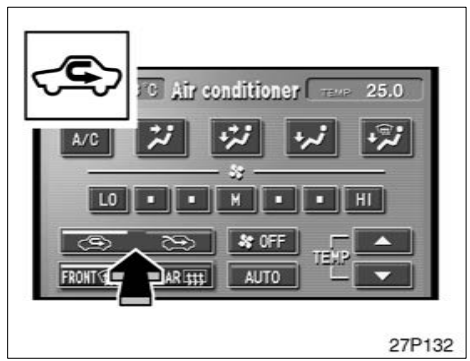

27P132

Type 2

The air intake control switch is used to switch the air intake between the OUTSIDE AIR mode and RECIRCULATED AIR mode.

With the switch in the OUTSIDE AIR mode, the system will take fresh outside air into the vehicle.

If quick circulation of cooled air is desired, touch the air intake control switch for RECIRCULATED AIR.

The indicator will come on in the instrument cluster while the RECIRCULATED AIR mode is selected.

If recirculated air is used during heating, the windows will fog up more easily.

If the hybrid system is turned off in the OUTSIDE AIR mode, the automatic control of the air intake is activated when the hybrid system is turned on again.

2–way air intake control

To improve fuel economy, OUTSIDE AIR mode control changes when the air intake selector is set in OUTSIDE AIR on the following conditions:

- When the maximum heating is needed with the air flow in “Floor” or “Floor/Windshield”, fresh air flows in the upper compartment, while air is recirculated in the lower compartment.
- When cooling is needed, both fresh and recirculate modes turns on.

Not For Reproduction

If manual on–off of the air conditioning is desired—

Touch the “A/C” switch to turn the air conditioning on and touch it again to turn the air conditioning off.

If the system is used for ventilation, heating in dry weather or removing frost or exterior fog on the windshield, turn the air conditioning off once it is no longer required. This will improve fuel economy. The air conditioning can be used for year–round automatic temperature control including cooling and dehumidifying operation.

(b) Windshield defogging and defrosting

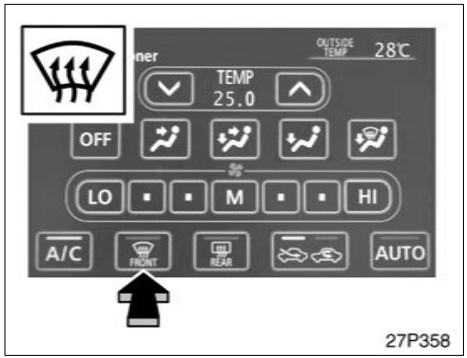

Type 1

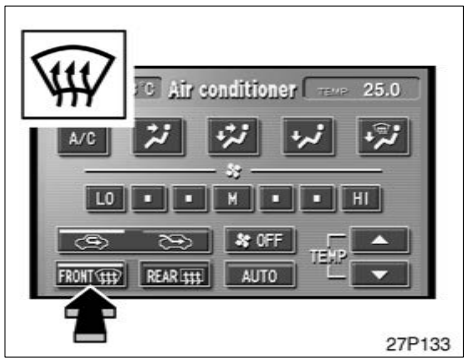

Type 2

To remove interior fog on the windshield—

Touch the windshield air flow switch.

To remove frost or exterior fog on the windshield—

1. Touch the upper side of the temperature control switch until maximum figure appears on the temperature display.
2. Touch the windshield air flow switch.
3. Push the "HI" of the air flow control switch to obtain a maximum air flow.
4. Leave the air conditioning on–off button off.

When the windshield air flow switch is touched, the air conditioning is set to operate and the OUTSIDE AIR mode is set if the outside air temperature is low.

Touch the "A/C" switch for dehumidified heating or cooling. This setting clears the front view more quickly.

If you touch the windshield air flow switch once again while in the windshield air flow mode, the mode then returns to the last mode used.

The indicator will come on in the instrument cluster while the windshield air flow mode is on.

⚠ CAUTION

Do not use the windshield air flow switch during cooled air operation in extremely humid weather. The difference between the temperature of the outside air and that of the windshield could cause the outer surface of the windshield to fog up blocking your vision.

Not For Reproduction

(c) Operating tips

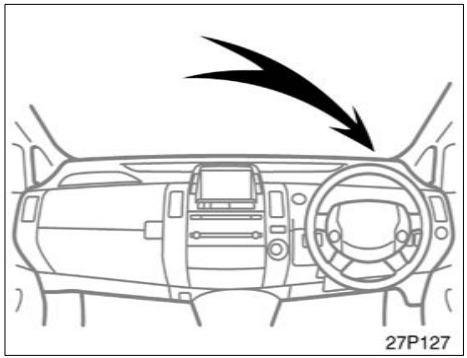

- The light sensor is located on the driver's side edge of the instrument panel. If you put anything on this area or cover the area, the sensor function may be adversely affected.
- To cool off your Toyota after it has been parked in the hot sun, drive with the windows open for a few minutes. This vents the hot air, allowing the air conditioning to cool the interior more quickly.
- Make sure the air intake grilles in front of the windshield are not blocked (by leaves or snow, for example).
- Keep the area under the front seats clear to allow air to circulate throughout the vehicle.
- On cold days, set the fan speed to high for a minute to help clear the intake ducts of snow or moisture. This can reduce the amount of fogging on the windows.
- When driving on dusty roads, close all windows. If dust thrown up by the vehicle is still drawn into the vehicle after closing the windows, it is recommended that the air intake selector be set to OUTSIDE AIR and the fan speed selector to any setting except "OFF".
- If following another vehicle on a dusty road, or driving in windy and dusty conditions, it is recommended that the air intake selector be temporarily set to RECIRCULATE, which will close off the outside passage and prevent outside air and dust from entering the vehicle interior.

Not For Reproduction

⚠ CAUTION

To prevent the windshield from fogging up, do not use the windshield air flow button during cool air operation in extremely humid weather. The difference between the temperature of the outside air and that of the windshield can cause the outer surface of the windshield to fog up, blocking your vision.

NOTICE

To prevent battery discharge, do not leave the air conditioning system on longer than necessary when the hybrid system is stopped.

Climate remote control (steering switches)

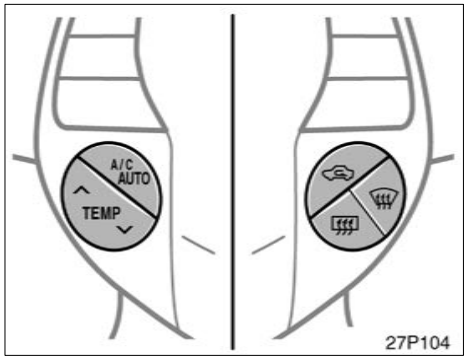

The switches are installed on both sides of the steering pad.

"A/C AUTO" switch: Use this switch to turn on the automatic mode. (For details, see page 187.) Pressing this switch in the automatic control turns the blower off.

"∧TEMP∨" switch: Use this switch to set the desired temperature. (For details, see page 188.)

"" switch: Use this switch to change the air intake mode. (For details, see page 190.)

"" switch: Use this switch to remove interior fog on the windshield. (For details, see page 192.)

"" switch: Use this switch to turn on or off the rear window and outside rear view mirror defoggers. (For details, see page 101.)

CAUTION

Operate the switches with due care while you are driving to avoid accidents.

Not For Reproduction

Instrument panel vents

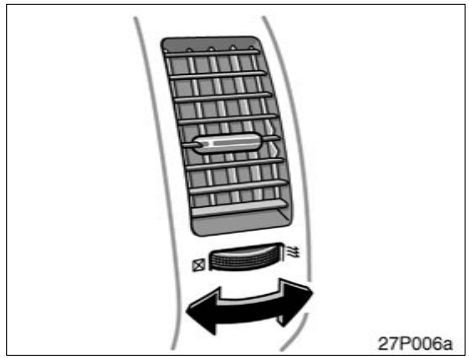

If air flow control is not satisfactory, check the instrument panel vents. The instrument panel vents may be opened or closed as shown.

Air conditioning filter—

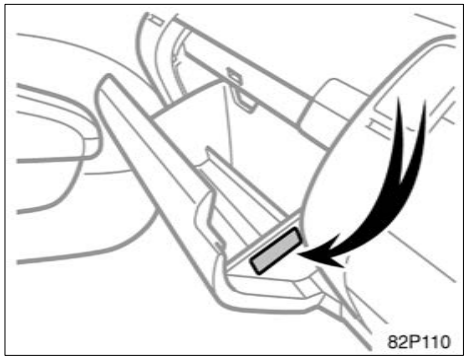

The air conditioning filter information label is placed on the right side of the glove box as shown and indicates that a filter has been installed.

The air conditioning filter prevents dust from entering the vehicle through the air conditioning vent.

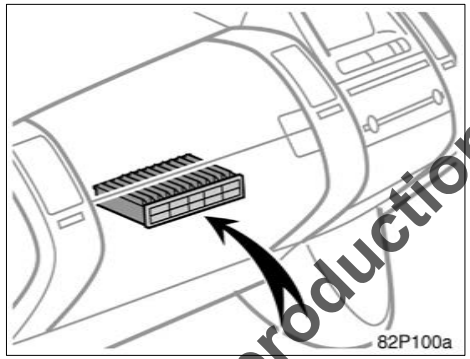

The air conditioning filter is set behind the glove box.

Not For Reproduction

—Checking and replacing the air conditioning filter

The air conditioning filter may clog after long use. The filter may need to be replaced if the air flow of the air conditioning and heater experiences extreme reductions in operating efficiency, or if the windows begin to fog up easily.

To maintain the air conditioning efficiency, inspect and replace the air conditioning filter according to the maintenance schedule. (For scheduled maintenance information, please refer to the “Warranty and Service Booklet”.)

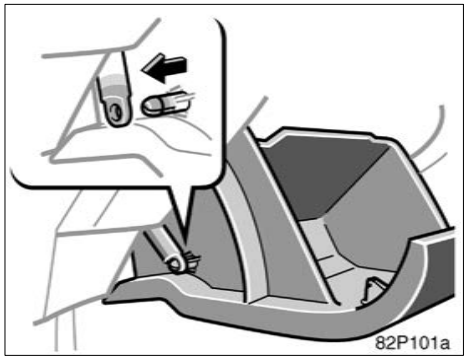

1. Open the glove box, and slide off the damper as shown.

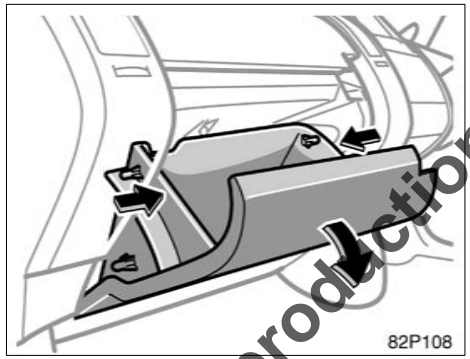

2. Push in each side of the glove box to disconnect the claws.

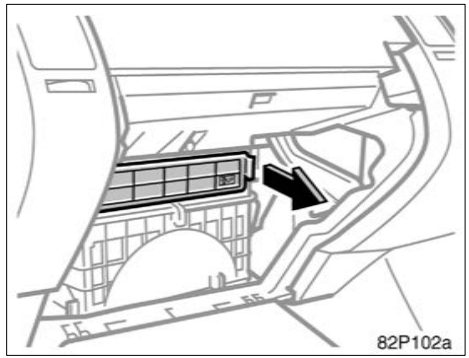

3. Pull the filter case toward you to take it out.

Not For Reproduction

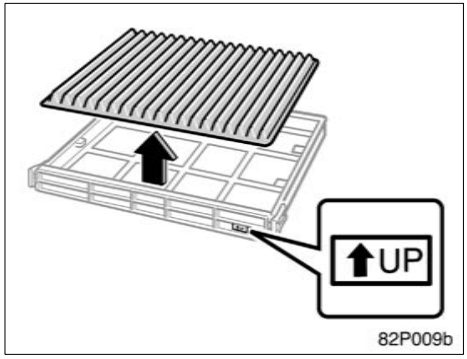

4. **Remove the filter from the filter case and replace it with a new one.**

5. **Install the filter and filter case in the reverse order of removal.**

When setting the filter to the filter case, ensure that the flat side of the filter is down and the ribbed side is up.

Position the filter case so that the "▲UP" mark is pointing up and install it in the vehicle.

INFORMATION
The air filter should be installed properly in position. The use of air conditioning with the air filter removed may cause deteriorated dustproof performance and then affect air conditioning performance.

Not For Reproduction

Not For Reproduction

OPERATION OF INSTRUMENTS AND CONTROLS

Other equipment

Clock 200
Rear view monitor system 200
Power outlet 203
AUX adapter 204
Rear console box 204
Glove boxes 205
Auxiliary boxes 205
Cup holders 206
Bottle holders 207
Tie–down hooks 208
Luggage storage box 208
Luggage cover 209
Floor mat 210

Not For Reproduction

Clock

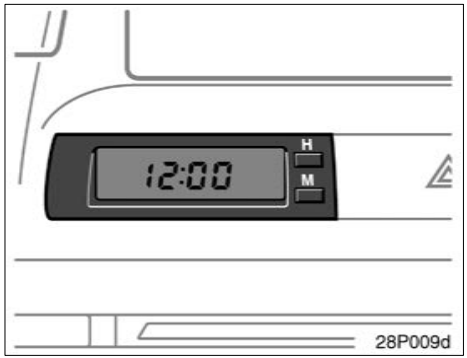

To set the hour: Push the “H” button.
To set the minutes: Push the “M” button.

The hybrid system must be in “ACC” or “IG–ON”.

If the electrical power source has been disconnected from the clock, the time display will automatically be set to 1:00.

When the instrument panel lights are turned on, the brightness of the time indicator will be reduced.

Rear view monitor system

The rear view monitor system assists the driver by displaying an image of the rear of the vehicle while backing up. The displayed image on the screen is a horizontally reversed mirror image of the inside rear view mirror.

To display the rear view image on the screen, place the shift lever in the “R” position when the “IG–ON” mode is enabled.

If you move the shift lever out of the “R” position, the screen returns to the previous screen. Operating another function of the navigation system will display another screen.

The rear view monitor system is a supplement device intended to assist back up. When backing up, be sure to check behind and all around the vehicle visually.

Not For Reproduction

CAUTION

- **Never depend on the rear view monitor system entirely when backing up. Always make sure your intended path is clear.**

  Use caution just as you would when backing up any vehicle.
- **Never back up while looking only at the screen. The image on the screen is different from actual conditions. Depicted distances between objects and flat surfaces will differ from actual distances. If you back up while looking only at the screen, you may hit a vehicle, a person or an object. When backing up, be sure to check behind and all around the vehicle visually and with mirrors before proceeding.**
- **Do not use the system when the back door is not completely closed.**

- If the back of the vehicle is hit, the position and mounting angle of the camera may change. Be sure to have the camera's position and mounting angle checked at your Toyota dealer.
- If the temperature changes rapidly, such as when hot water is poured on the vehicle in cold weather, the system may not operate normally.
- If the camera lens becomes dirty, it cannot transmit a clear image. If water droplets, snow, or mud adheres to the lens, rinse with water and wipe with a soft cloth. If the lens is extremely dirty, wash it with a mild cleanser and rinse.
- Use your own eyes to confirm the vehicle's surroundings, as the displayed image may become faint or dark, and moving images will be distorted, or not entirely visible when the outside temperature is low. When backing up, be sure to check behind and all around the vehicle visually and with mirror before proceeding.

When replacing the tires, please consult your Toyota dealer. If you replace the tires, the area displayed on the screen may change.

Not For Reproduction

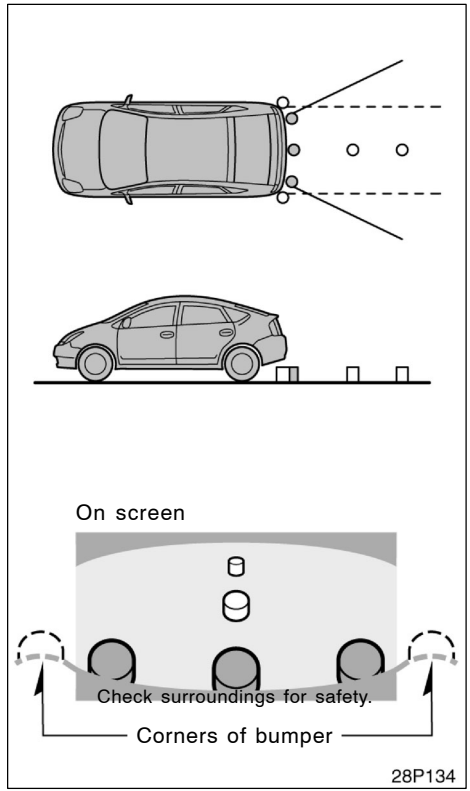

AREA DISPLAYED ON SCREEN

Image is displayed approximately level on screen.

- **The area detected by the camera is limited. Objects which are close to either corner of the bumper or under the bumper cannot be seen on the screen.**
- **The area displayed on the screen may vary according to vehicle orientation or road conditions.**

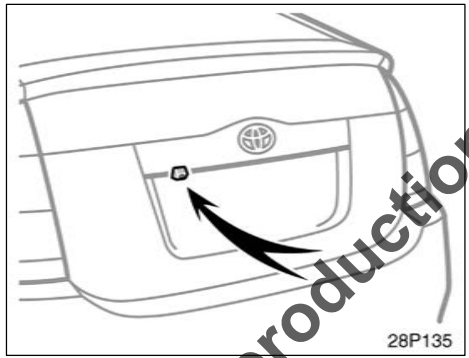

THE REAR VIEW MONITOR SYSTEM CAMERA

The rear view monitor system camera is located on the back door as shown in the illustration. The camera uses a special lens. The distance of the image that appears on the screen differs from the actual distance.

In the following cases, it may become difficult to see the images on the screen, even when the system is functioning.

- In the dark (for example, at night)
- When the temperature near the lens is extremely high or low
- When water droplets are adhering to the camera, or when humidity is high (for example, when it rains)
- When foreign matter (for example, snow or mud) adheres to the camera lens
- When the sun or the beam of headlights is shining directly into the camera lens

Not For Reproduction

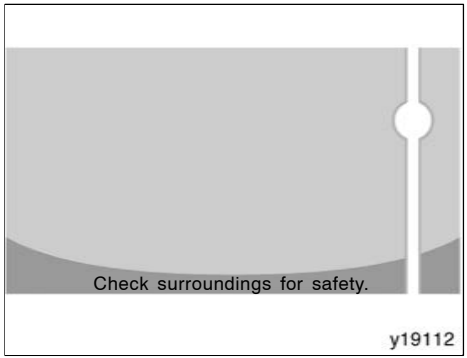

If a bright light (for example, sunlight reflected off the vehicle body) is picked up by the camera, the smear effect* peculiar to the camera may occur.

*: Smear effect—A phenomenon that occurs when a bright light (for example, sunlight reflected off the vehicle body) is picked up by the camera; when transmitted by the camera, the light source appears to have a vertical streak above and below it.

Power outlet

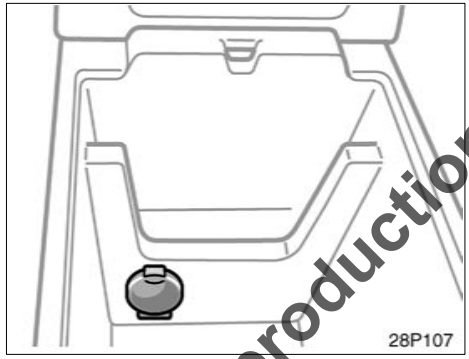

Rear console box

The power outlet is designed for power supply for car accessories.

The hybrid system must be in “ACC” or “IG–ON” for the power outlet to be used.

NOTICE

- ***To prevent the fuse from being blown, do not use the electricity over the total vehicle capacity of 12V/120W.***
- ***To prevent the battery from being discharged, do not use the power outlet longer than necessary when the hybrid system is not operating.***
- ***Close the power outlet lid when the power outlet is not in use. Inserting anything other than an appropriate plug that fits the outlet, or allowing any liquid to get into the outlet may cause electrical failure or short circuits.***

Not For Reproduction

AUX adapter

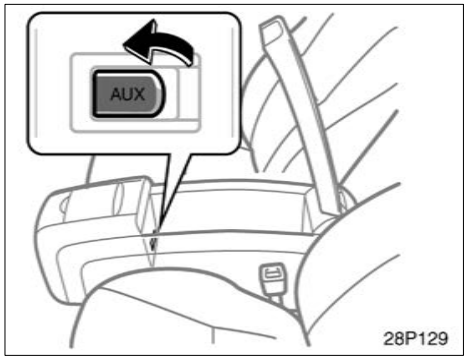

An AUX adapter is installed in the rear console box.

By inserting a mini plug into the AUX adapter, you can listen to music from a portable audio device through the vehicle's speaker system.

To use the AUX adapter, switch to the AUX mode (external device mode) by pressing "DISC·AUX" button. When the AUX adapter is in use, "AUX" will appear on the display. To adjust the volume, turn the "PWR·VOL" knob.

When using a portable audio device connected to the power outlet or cigarette lighter, noise may occur during playback. If this happens, use the power source of the portable audio device.

If you install an audio system other than a genuine audio system, you will not be able to use the AUX adapter.

Not For Reproduction

Rear console box

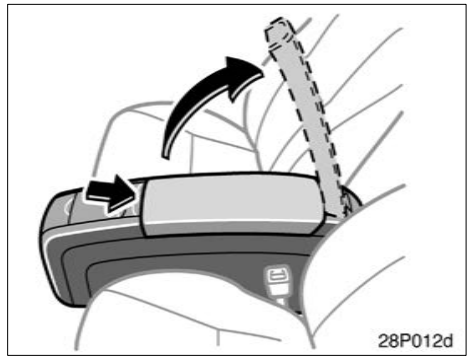

To use the rear console box, open as shown in the illustration.

⚠ CAUTION

When opening the rear console box, take due care not to catch your fingers.

Glove boxes

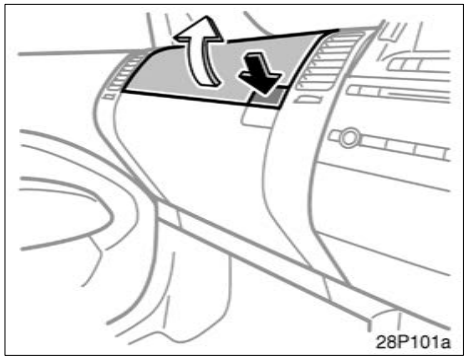

Upper glove box

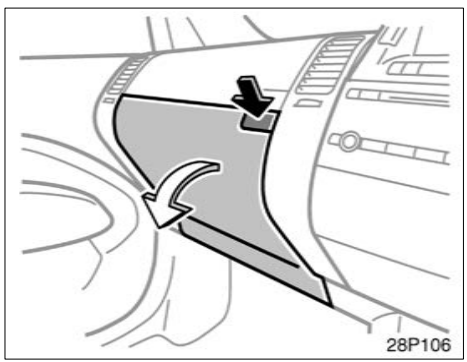

Lower glove box

To open the glove boxes, push each button.

The inside of the upper glove box is separated by the partition. When storing a longer object, remove the partition.

With the instrument panel lights on, the lower glove box light will come on when the lower glove box is open.

⚠ CAUTION

To reduce the chance of injury in case of an accident or a sudden stop, always keep the glove box doors closed while driving.

Auxiliary boxes

To use the box, open the lid as shown in the following illustrations.

⚠ CAUTION

- **To reduce the chance of injury in case of an accident or a sudden stop, always keep the auxiliary box closed while driving.**
- **Auxiliary box on the ceiling—**
  As this box is designed for holding a light object such as an eyeglass, do not place any heavy objects in it. Heavy objects may cause the holder to open and contents to fly out resulting in injuries.

NOTICE

Auxiliary box on the ceiling—
In hot weather, inside of the vehicle ceiling becomes very hot. Do not leave anything flammable or deformable such as a lighter, the glasses, etc. inside.

Not For Reproduction

Cup holders

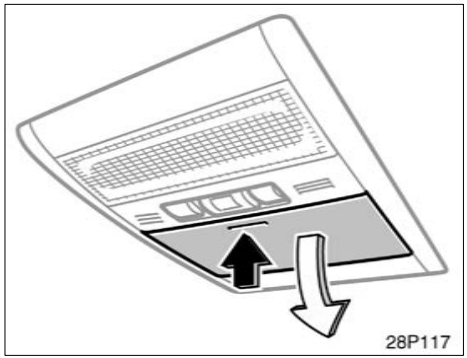

Front ceiling

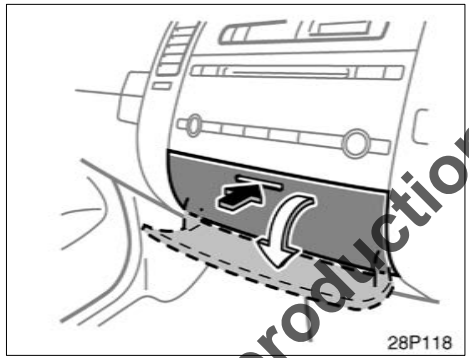

On the instrument panel

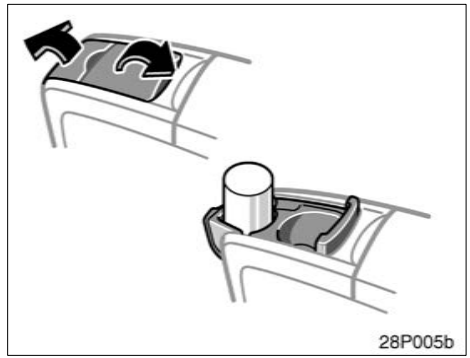

For front seats

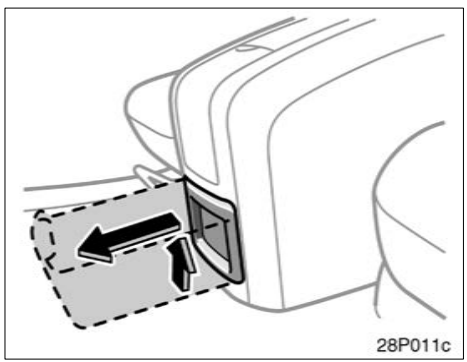

Front side of the console box

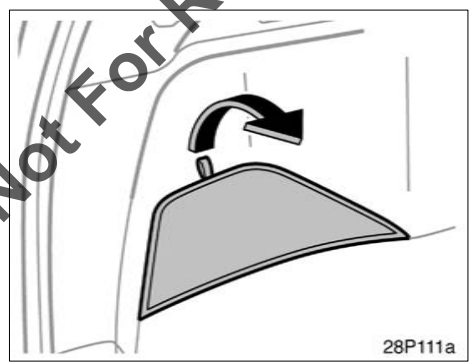

Left side of the luggage compartment

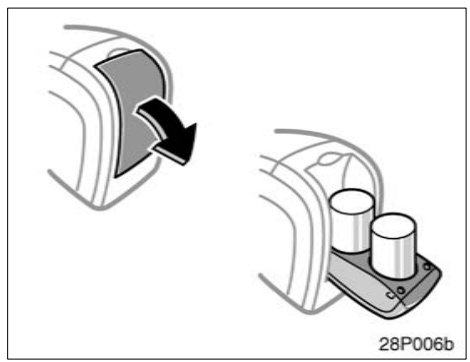

For rear seats

Not For Reproduction

The cup holder is designed for holding cups or drink–cans securely.

To use the cup holder, open the lid.

⚠ CAUTION

- **Do not place anything else other than cups or drink–cans on the cup holder, as such items may be thrown about in the compartment and possibly injure people in the vehicle during sudden braking or in an accident. If possible, cover hot drinks to prevent burns.**
- **To reduce the chance of injury in case of an accident or a sudden stop while driving, keep the cup holder closed when not in use.**
- **Take due care not to catch your fingers when the cup holder is opened.**

Bottle holders

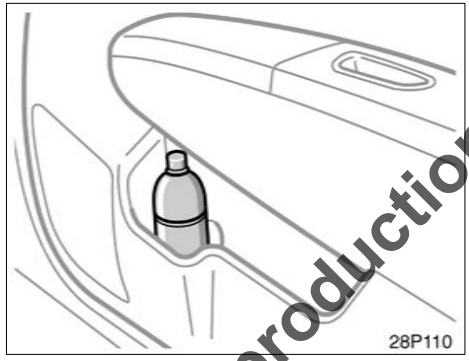

The bottle holders are designed to hold bottles securely.

⚠ CAUTION

Do not attempt to use the holder for any other purpose for which it was intended. Inappropriately sized or shaped objects may be thrown about in the compartment and possibly injure people in the vehicle during a sudden braking or an accident.

NOTICE

Do not put a cup or open bottle in the bottle holder because the contents may spill when the door opens or closes.

Not For Reproduction

Tie–down hooks

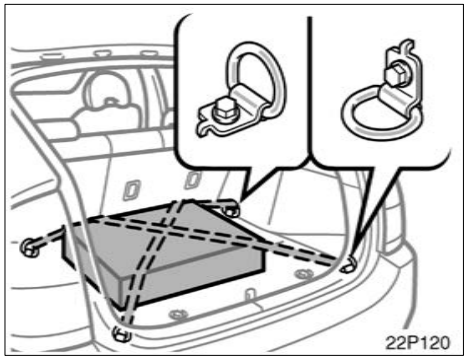

To secure your luggage, use the tie–down hooks as shown above.

See “Luggage stowage precautions” on page 222 for precautions in loading luggage.

⚠ CAUTION

To avoid personal injury, keep the tie–down hooks retracted when not in use.

Luggage storage box

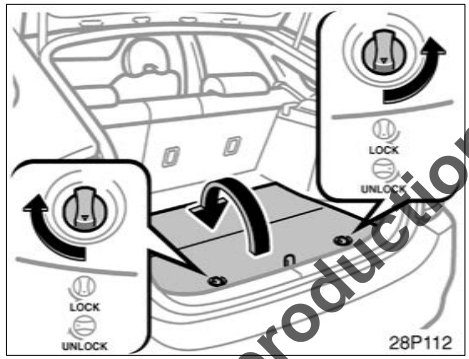

1. To open the luggage storage box, turn the knob to the “UNLOCK” position and open the lid.

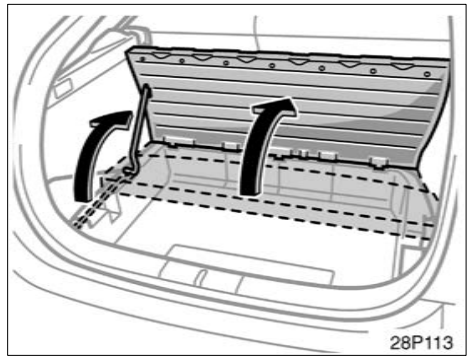

2. Hold the lid open by inserting the support rod into the slot.

⚠ CAUTION

To reduce the chance of injury in case of an accident or a sudden stop, keep the luggage storage box closed and locked while driving.

Not For Reproduction

Luggage cover

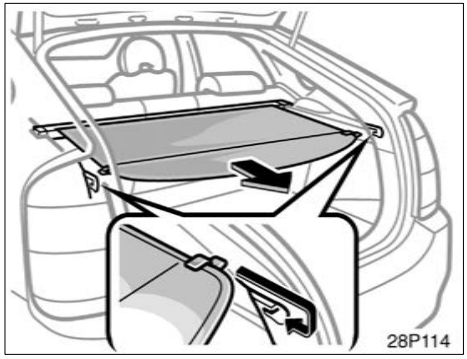

To use the luggage cover, pull it out of the retractor and hook it on the anchors.

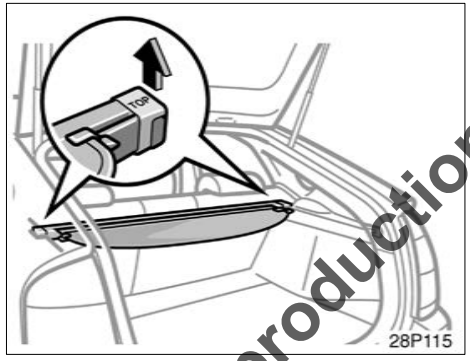

To remove the luggage cover, lift it up.

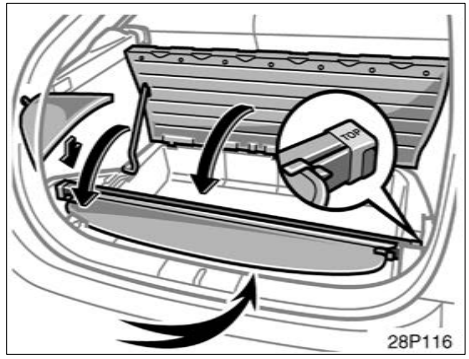

You can stow the luggage cover in the luggage storage box in the luggage compartment as shown in the illustration. At that time, adjust the cover so that “TOP” is facing up.

After removing the luggage cover, stow it in the luggage storage box or place it somewhere other than the passenger compartment. This will prevent passengers from being injured in the event of a sudden stop or accident.

⚠ CAUTION

Do not place anything on the luggage cover. Such items may be thrown away and possibly injure people in the vehicle during sudden braking or a collision.

Not For Reproduction

Floor mat

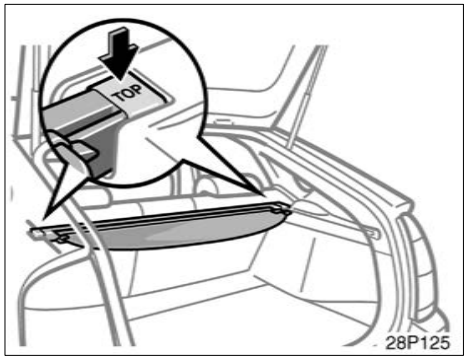

To replace the luggage cover, adjust the cover so that "TOP" is facing upwards.

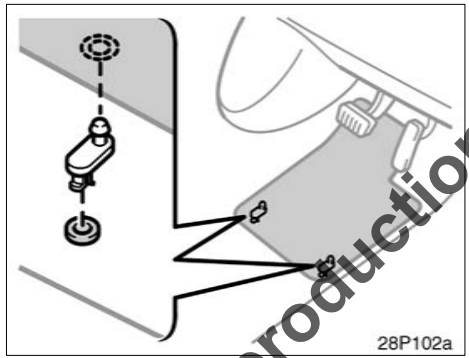

Use a floor mat of the correct size.

If the vehicle carpet and floor mat have 2 holes, then they are designed for use with locking clips. Attach the floor mat to the vehicle carpet using the clips. Lock the clips into the holes in the vehicle carpet.

CAUTION

Observe the following precautions. Failure to do so may result in the floor mat slipping and interfering with the movement of the pedals during driving, resulting in an accident.

- **Make sure the floor mat is properly placed on the floor carpet and the correct side faces upward.**
- **Do not place floor mats on top of existing mats.**

Not For Reproduction

SECTION 3

INFORMATION BEFORE DRIVING YOUR TOYOTA

Break–in period 212
Fuel 212
Fuel pump shut–off system 213
Operation in foreign countries 213
Three–way catalytic converters 213
Engine exhaust cautions 214
Facts about engine oil consumption 215
Iridium–tipped spark plugs 216
Brake system 217
Electric power steering system 221
Brake pad wear limit indicators 221
Luggage stowage precautions 222
Your Toyota's identification 222
Suspension and chassis 223

Not For Reproduction

Break–in period

Drive gently and avoid high speeds.

Your vehicle does not need an elaborate break–in. But following a few simple tips for the first 2000 km (1200 miles) can add to the future economy and long life of your vehicle:

- Avoid full–throttle acceleration when starting and driving.
- Avoid racing the hybrid engine.
- Try to avoid hard stops during the first 300 km (200 miles).

Fuel

Selecting the proper fuel is essential for satisfactory engine performance.

Engine damage caused by use of improper fuels is not covered under Toyota's new vehicle warranty.

FUEL TYPE

Use only unleaded gasoline.

To help prevent gas station mix–ups, your vehicle has a smaller fuel tank opening. The special nozzle on pumps with unleaded fuel will fit it, but the larger standard nozzle on pumps with leaded gas will not.

NOTICE
Do not use leaded gasoline. Use of leaded gasoline will cause the three–way catalytic converter to lose its effectiveness and the emission control system to function improperly. Also, this can increase maintenance costs.

Not For Reproduction

OCTANE NUMBER

Select Research Octane Number 91 or higher. For improved vehicle performance, the use of premium unleaded gasoline with a Research Octane Number of 95 or higher is recommended.

Use of fuel with an octane number lower than stated will cause persistent heavy knocking. If severe, this will lead to engine damage.

If your engine knocks...

If you detect heavy knocking even when using the recommended fuel, or if you hear steady knocking while holding a steady speed on level roads, consult your Toyota dealer.

However, now and then, you may notice light knocking for a short time while accelerating or driving up hills. This is no need of concern.

FUEL TANK CAPACITY

45 L (11.9 gal., 9.9 Imp.gal.)

Fuel pump shut–off system

The fuel pump shut off system stops supplying fuel to the engine to minimize the risk of fuel leakage when the engine stalls or an airbag inflates upon collision. To restart the hybrid system after the fuel pump shut–off system activates, press the “POWER” switch to the “OFF” mode and start it.

CAUTION

Inspect the ground under the vehicle before restarting the hybrid system. If you find that fuel has leaked onto the ground, the fuel system has been damaged and is in need of repair. In this case, do not restart the hybrid system.

Operation in foreign countries

If you plan to drive your Toyota in another country...

First, comply with the vehicle registration laws.

Second, confirm the availability of the correct fuel.

Not For Reproduction

Three–way catalytic converters

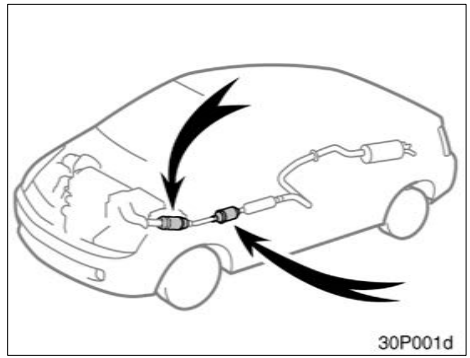

The three–way catalytic converters are emission control devices installed in the exhaust system.

The purpose is to reduce pollutants in the exhaust gas.

CAUTION

- **Keep people and combustible materials away from the exhaust pipe while the engine is running. The exhaust gas is very hot.**
- **Do not drive, idle or park your vehicle over anything that might burn easily such as grass, leaves, paper or rags.**

NOTICE

A large amount of unburned gases flowing into the three-way catalytic converter may cause it to overheat and create a fire hazard. To prevent this and other damage, observe the following precautions:

- *Use only unleaded gasoline.*
- *Do not drive with an extremely low fuel level; running out of fuel could cause the engine to misfire, creating an excessive load on the three-way catalytic converter.*
- *Do not turn off the ignition while the vehicle is moving.*
- *Keep your engine in good running order. Malfunctions in the engine electrical system, electronic ignition system/distributor ignition system or fuel system could cause an extremely high temperature.*
- *If the engine becomes difficult to start or stalls frequently, take your vehicle in for a check-up as soon as possible. Remember, your Toyota dealer knows your vehicle and its three-way catalytic converter system best.*

- *To ensure that the three-way catalytic converter and the entire emission control system operate properly, your vehicle must receive the periodic inspections required by the Toyota Maintenance Schedule. For scheduled maintenance information, refer to the "Warranty and Service Booklet".*

Not For Reproduction

Engine exhaust cautions

CAUTION

- **Exhaust gases include harmful carbon monoxide (CO) that is colorless and odorless. Inhaling exhaust gases may lead to death or a serious health hazard.**
- **The exhaust should be checked occasionally. If there is a hole or crack caused by corrosion, damage to a joint or abnormal exhaust noise, be sure to have the vehicle inspected and repaired by your Toyota dealer. Failure to do so may allow exhaust gases to enter the vehicle, resulting in death or a serious health hazard.**
- **If the vehicle is in a poorly ventilated area, turn the engine off. In a closed area, such as a garage, exhaust gases may collect and enter the vehicle. This may lead to death or a serious health hazard.**

- **Do not remain for a long time in a parked vehicle with the hybrid system running. If it is unavoidable, however, do so only in an unconfined area and adjust the heating or cooling system to force outside air into the vehicle.**
- **Keep the back door closed while driving. An open or unsealed back door may cause exhaust gases to be drawn into the vehicle.**
- **To allow proper operation of your vehicle's ventilation system, keep the inlet grilles in front of the windshield clear of snow, leaves, or other obstructions.**
- **If the smell of exhaust is noticed inside the vehicle, open the windows. Large amounts of exhaust in the vehicle can cause driver drowsiness and an accident, resulting in death or a serious health hazard. Have the vehicle inspected by your Toyota dealer immediately.**

- **Do not leave the engine running in an area with snow build–up, or where it is snowing. If snowbanks build up around the vehicle while the engine is running, exhaust gases may collect and enter the vehicle. This may lead to death or a serious health hazard.**
- **When taking a nap in the vehicle, always turn the engine off. Otherwise, you may accidentally move the shift lever or depress the accelerator pedal, which could cause an accident or fire due to engine overheating. Additionally, if the vehicle is parked in a poorly ventilated area, exhaust gases may collect and enter the vehicle, leading to death or a serious health hazard.**

Not For Reproduction

Facts about engine oil consumption

FUNCTIONS OF ENGINE OIL

Engine oil has the primary functions of lubricating and cooling the inside of the engine, and plays a major role in maintaining the engine in proper working order.

ENGINE OIL CONSUMPTION

It is normal that an engine should consume some engine oil during normal engine operation. The causes of oil consumption in a normal engine are as follows.

- Oil is used to lubricate pistons, piston rings and cylinders. A thin film of oil is left on the cylinder wall when a piston moves downwards in the cylinder. High negative pressure generated when the vehicle is decelerating sucks some of this oil into the combustion chamber. This oil as well as some part of the oil film left on the cylinder wall is burned by the high temperature combustion gases during the combustion process.
- Oil is also used to lubricate the stems of the intake valves. Some of this oil is sucked into the combustion chamber together with the intake air and is burned along with the fuel. High temperature exhaust gases also burn the oil used to lubricate the exhaust valve stems.

The amount of engine oil consumed depends on the viscosity of the oil, the quality of the oil and the conditions the vehicle is driven under.

More oil is consumed by high–speed driving and frequent acceleration and deceleration.

A new engine consumes more oil, since its pistons, piston rings and cylinder walls have not become conditioned.

Oil consumption: Max. 1.0 L per 1000 km (1.1 qt./600 miles, 0.9 Imp.qt./600 miles)

When judging the amount of oil consumption, note that the oil may become diluted and make it difficult to judge the true level accurately.

As an example, if a vehicle is used for repeated short trips, and consumes a normal amount of oil, the dipstick may not show any drop in the oil level at all, even after 1000 km (600 miles) or more. This is because the oil is gradually becoming diluted with fuel or moisture, making it appear that the oil level has not changed. The diluting ingredients evaporate out when the vehicle is then driven at high speeds, as on an expressway, making it appear that oil is excessively consumed after driving at high speeds.

IMPORTANCE OF ENGINE OIL LEVEL CHECK

One of the most important points in proper vehicle maintenance is to keep the engine oil at the optimum level so that oil function will not be impaired. Therefore, it is essential that the oil level be checked regularly. Toyota recommends that the oil level be checked every time you refuel the vehicle.

NOTICE
Failure to check the oil level regularly could lead to serious engine trouble due to insufficient oil.

For detailed information on oil level check, see “Checking the engine oil level” on page 272.

Not For Reproduction

Iridium–tipped spark plugs

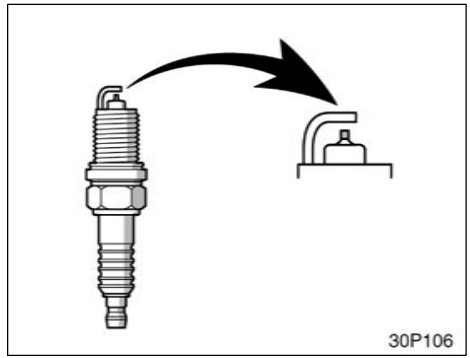

Your engine is fitted with iridium–tipped spark plugs.

NOTICE
Use only iridium–tipped spark plugs. Do not adjust gaps for engine performance or smooth driveability.

Brake system

REGENERATIVE BRAKE

When the brake is applied, the electric motor used as a generator converts kinetic energy into electric energy.

The regenerative brake works in the following operations.

1. When the accelerator pedal is released, the reduced speed equal to engine braking in a gasoline–fueled vehicle is obtained in accordance with the running mode position of the shift lever.
2. When the brake pedal is depressed with the shift lever in “D” or “B”, the regenerative brake works.

HYDRAULIC BRAKE

This brake system has 3 independent hydraulic circuits. If either circuit should fail, the other will still work. However, the pedal will be harder to press, and your stopping distance will increase. Also, the brake system warning light may come on.

⚠ CAUTION

Do not drive your vehicle with only a single brake system. Have your brakes fixed immediately.

BRAKE ACTUATOR

The brake actuator uses brake fluid pressurized by the pump to power–assist the brakes. If the brake actuator fails during driving, the brake system warning light comes on and buzzer sounds continuously. In this case, the brakes may not work properly. If they do not work well, depress the brake pedal firmly. If the brake system warning light comes on, immediately stop your vehicle and contact your Toyota dealer.

The yellow brake system warning light may stay on for about 60 seconds after the “IG–ON” mode is enabled. It is normal if the light turns off after a while.

Depressing the brake pedal repeatedly may turn on the red brake system warning light and buzzer. It is normal if the light turns off and the buzzer stops sounding after a few seconds.

You may hear a small sound in the engine compartment after the hybrid system is started or the brake pedal is depressed repeatedly. This is a pump pulsating sound of the brake system, and it is not a malfunction.

In the following conditions, you may hear a motor sound in the engine compartment.

- The brake pedal is depressed when the hybrid system is turned off.
- The driver’s door is opened.
- For a few seconds after the hybrid system is “OFF” and about 90 seconds have passed.

The brake pedal stroke may be short when you press the “POWER” switch with the brake pedal depressed.

Not For Reproduction

⚠ CAUTION

- **Do not pump the brake pedal if the hybrid system is not operating. Each push on the pedal uses up your reserved brake fluid pressure.**
- **Even if the power assist is completely lost, the brakes will still work. But you will have to push the pedal hard, much harder than normal. And your braking distance will increase.**

ANTI–LOCK BRAKE SYSTEM

The anti–lock brake system is designed to automatically help prevent lock–up of the wheels during a sudden braking or braking on slippery road surfaces. This assists in providing directional stability and steering performance of the vehicle under these circumstances.

Effective way to press the ABS brake pedal: When the anti–lock brake system function is in action, the slip indicator in the instrument cluster flashes and you will hear a noise. In this situation, to let the anti–lock brake system work for you, just hold the brake pedal down more firmly. Do not pump the brake in a panic stop. This will result in reduced braking performance.

The anti–lock brake system becomes operative after the vehicle has accelerated to a speed in excess of approximately 10 km/h (6 mph). It stops operating when the vehicle decelerates to a speed below approximately 5 km/h (3 mph).

Depressing the brake pedal on slippery road surfaces such as on a manhole cover, a steel plate at a construction site, joints in a bridge, etc. on a rainy day tends to activate the anti–lock brake system.

When the anti–lock brake system is activated, the following condition may occur. They do not indicate a malfunction of the system:

- You may hear the anti–lock brake system operating and the vibrations of the vehicle body and steering wheel. You may also hear the motor sound in the engine compartment even after the vehicle is stopped.

Not For Reproduction

⚠ CAUTION

Do not overestimate the anti–lock brake system: Although the anti–lock brake system assists in providing vehicle control, it is still important to drive with all due care and maintain a moderate speed and safe distance from the vehicle in front of you, because there are limits to the vehicle stability and effectiveness of steering wheel operation even with the anti–lock brake system on.

If tire grip performance exceeds its capability, or if hydroplaning occurs during high speed driving in the rain, the anti–lock brake system does not provide vehicle control.

Anti–lock brake system is not designed to shorten the stopping distance: Always drive at a moderate speed and maintain a safe distance from the vehicle in front of you. Compared with vehicles without an anti–lock brake system, your vehicle may require a longer stopping distance in the following cases:

- **Driving on rough, gravel or snow–covered roads.**
- **Driving with tire chains installed.**
- **Driving over the steps such as the joints on the road.**
- **Driving on roads where the road surface is pitted or has other differences in surface height.**

Install all 4 tires of specified size at appropriate pressure: The anti–lock brake system detects vehicle speeds using the speed sensors for respective wheels' turning speeds. The use of tires other than specified may fail to detect the accurate turning speed, resulting in a longer stopping distance.

Not For Reproduction

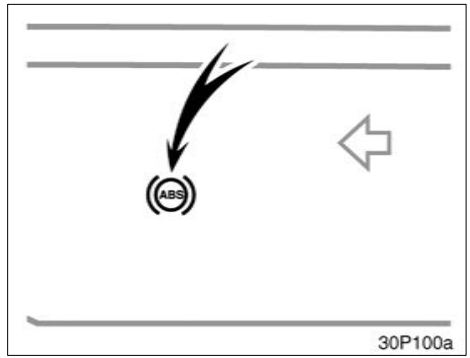

"ABS" warning light

The light comes on when the "IG–ON" mode is enabled. If the anti–lock brake system works properly, the light turns off after the "READY" light comes on. Thereafter, if the system malfunctions, the light comes on again.

When the "ABS" warning light is on (and the brake system warning light is on), the anti–lock brake system does not operate, but the brake system still operates conventionally.

If any of the following conditions occurs, this indicates a malfunction somewhere in the components monitored by the warning light system. Contact your Toyota dealer as soon as possible to service the vehicle.

- The light does not come on when the "IG–ON" mode is enabled, or the "READY" light remains on.
- The light comes on while you are driving.

A warning light turning on briefly during operation does not indicate a problem.

CAUTION

If the "ABS" warning light remains on together with the red brake system warning light, immediately stop your vehicle at a safe place and contact your Toyota dealer.

In this case, not only the anti-lock brake system function and brake assist function will fail but also the vehicle will become extremely unstable during braking.

Any of the following conditions may occur, but does not indicate a malfunction:

- The light may stay on for about 60 seconds after the "IG–ON" mode is enabled. It is normal if it turns off after a while.
- Depressing the brake pedal repeatedly may turn on the light. It is normal if it turns off after a few seconds.

Not For Reproduction

DRUM–IN–DISC TYPE PARKING BRAKE SYSTEM

Your vehicle has a drum–in–disc type parking brake system. This type of brake system needs bedding–down of the brake shoes periodically or whenever the parking brake shoes and/or drums are replaced.

Have your Toyota dealer, perform the bedding down.

BRAKE ASSIST SYSTEM

When you slam the brakes on, the brake assist system judges as an emergency stop and provides more powerful braking for a driver who cannot hold down the brake pedal firmly.

When you slam the brakes on, more powerful braking will be applied. At this time, you may hear a sound in the engine compartment. This does not indicate a malfunction.

The brake assist system becomes operative after the vehicle has accelerated to a speed in excess of approximately 10 km/h (6 mph). It stops operating when the vehicle decelerates to a speed below approximately 5 km/h (3 mph).

For an explanation of this system's warning light, see "Service reminder indicators and warning buzzers" on page 107.

Electric power steering system

The electric power steering system, using an electric motor, assists the turning of the steering wheel.

In the following cases, you may feel the steering becomes heavy. However, the electric power steering system warning light does not come on. (Because it is not a malfunction.)

- When maneuvering the steering frequently or keeping the steering wheel turned fully while the vehicle is stopped or moving very slowly

  The power steering effect will be reduced to prevent the system from overheating. Avoid turning the steering wheel, or stop the vehicle. When you leave the vehicle in the “IG–ON” mode for a while, the system will become cool.

NOTICE
If you repeat the operation which will turn on the overheating prevention function, the electric power steering system may be damaged.

- When the 12 volt battery is discharged

  Check the 12 volt battery’s condition. If necessary, recharge or replace the battery. For details, see “Checking 12 volt battery condition” on page 284.

- When the steering wheel is operated with the hybrid system not to be turned on (with the “READY” light off)

  The 12 volt battery capacity is decreased temporarily. The system returns to normal some time after the hybrid system is turned on.

If there is a problem somewhere in the electric power steering system, the warning light comes on in the multi–information display. For details, see “Multi–information display” on page 114.

When you move the steering wheel, an electrical motor noise may be heard. This is power steering motor noise, and is not a malfunction.

Not For Reproduction

Brake pad wear indicators

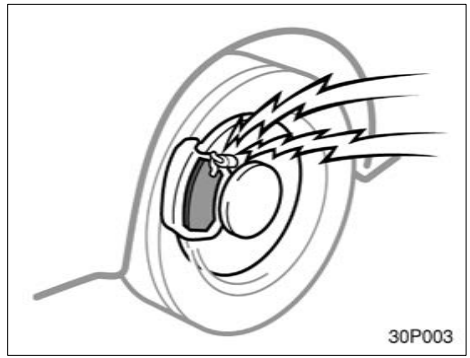

The brake pad wear indicators on your disc brakes give a warning noise when the brake pads are worn to where replacement is required.

If you hear a squealing or scraping noise while driving, have the brake pads checked and replaced by your nearest Toyota dealer as soon as possible.

Avoid continuous driving with the warning noise.

Continuous driving without replacing the brake pads will cause expensive rotor damage and increasing brake pedal effort to get the same stopping distance.

Luggage stowage precautions

When stowing cargo or luggage in the vehicle, observe the following:

- Put cargo or luggage in the luggage compartment when at all possible. Be sure all items are secured in place.
- Be careful to keep the vehicle balanced. Locating the weight as far forward as possible helps maintain balance.
- For better fuel economy, do not carry unneeded weight.

⚠ CAUTION

- **To prevent cargo and luggage from sliding forward during braking, do not stack anything in the luggage compartment. Keep cargo and luggage low, as close to the floor as possible.**
- **Never allow anyone to ride in the luggage compartment. It is not designed for passengers. They should ride in their seats with their seat belts properly fastened. Otherwise, they are much more likely to cause death or serious bodily injury, in the event of sudden braking or a collision.**

- **Do not place anything on the luggage cover. Such items may be thrown about and possibly injure people in the vehicle during sudden braking or an accident. Secure all items in a safe place.**
- **Do not drive with objects left on top of the instrument panel. They may interfere with the driver's field of view. Or they may move during sharp vehicle acceleration or turning, and impair the driver's control of the vehicle. In an accident they may injure the vehicle occupants.**

Not For Reproduction

Your Toyota's identification——Vehicle identification number

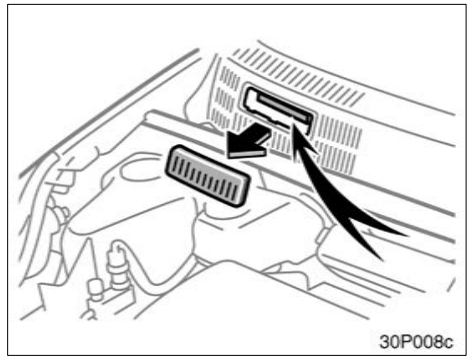

The vehicle identification number (VIN) is the legal identifier for your vehicle. This number is stamped in the engine compartment as shown.

This is the primary identification number for your Toyota. It is used in registering the ownership of your vehicle.

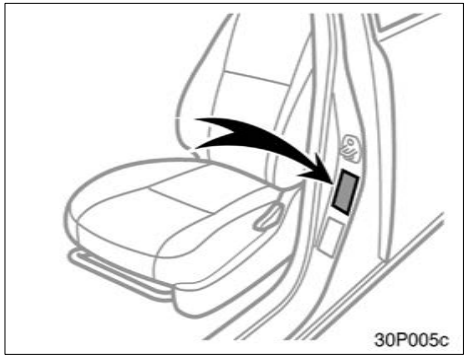

The vehicle identification number (VIN) is also on the manufacturer's plate.

—Engine and motor number

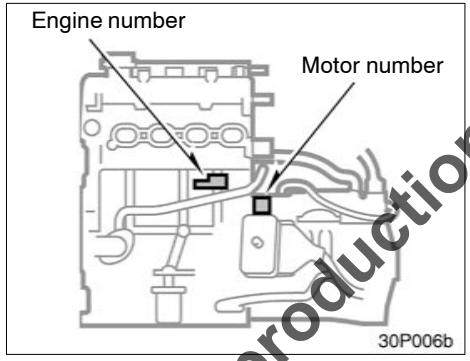

The engine and motor number plates are installed on the engine and transaxle case as shown.

Suspension and chassis

⚠ CAUTION

Do not modify the suspension/chassis with lift kits, spacers, springs, etc. It can cause dangerous handling characteristics, resulting in loss of control.

Not For Reproduction

Not For Reproduction

SECTION 4

STARTING AND DRIVING

Before starting the hybrid system 226
How to start the hybrid system 226
Pre–trip safety check 228
Tips for driving in various conditions 230
Driving in the rain 231
Winter driving tips 232
Trailer towing 233
How to save fuel and make your vehicle last longer, too 233

Not For Reproduction

Before starting the hybrid system

1. Check the area around the vehicle before entering it.
2. Adjust seat position, seatback angle, head restraint height and steering wheel angle.
3. Adjust the inside and outside rear view mirrors.
4. Lock all doors.
5. Fasten seat belts.

When you get in the vehicle, check whether the "READY" light is on or not.

⚠ CAUTION

Your vehicle does not produce any noise or vibration when the vehicle is ready to be driven with the "READY" light on. Move your foot carefully from the brake pedal to the acceleration pedal when driving.

How to start the hybrid system— (a) Before starting the hybrid system

1. Apply the parking brake firmly.
2. Turn off unnecessary lights and accessories.
3. Depress the brake pedal and hold it to the floor until driving off.

Not For Reproduction

(b) Turning on the hybrid system (Using the smart function—on some models)

Before starting the hybrid system, be sure to follow the instructions in "(a) Before starting the hybrid system".

Normal starting procedure

Carry the key and press the "POWER" switch briefly and firmly with the brake pedal depressed. The "READY" light starts blinking. After a few seconds, the blinking "READY" light remains on and two beeps sound. (If the ambient temperature is low, such as during winter driving conditions, it may take time until the "READY" light is on.)

The engine may not start even with the "READY" light on.

You may hear a motor sound in the engine compartment when the brake pedal is depressed with the hybrid system off.

When the hybrid system is started or stopped, you may hear a sound coming from the hybrid battery in the luggage compartment. However, this does not indicate any trouble.

If there is a problem somewhere in the hybrid system, the hybrid system malfunction warning light will come on in place of the “READY” light. If this happens, contact your Toyota dealer.

⚠ CAUTION

Never start the hybrid system from outside the vehicle, or an accident may occur. Be sure to sit on the driver seat, then start the system when driving.

NOTICE

- ***The hybrid system cannot be started when the shift position is “N”. Be sure to put it in “P” and then start the system.***
- ***If any warning light comes on (See page 107 for details.) or the 12 volt battery is disconnected, the hybrid system may not start by pushing the “POWER” switch. In that case, push it once again. If the “READY” light does not come on, contact your Toyota dealer.***
- ***When you start the hybrid system at a lowered outside temperature, it may take longer before the blinking “READY” light changes to stay on.***

Not For Reproduction

(b) Turning on the hybrid system (Using the key)

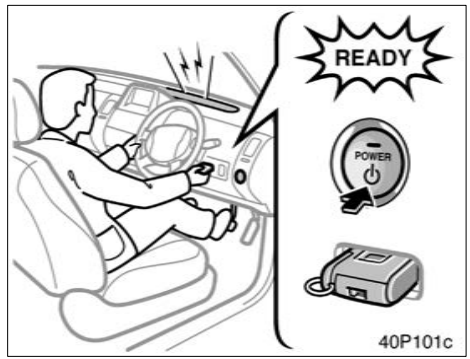

Before starting the hybrid system, be sure to follow the instructions in “(a) Before starting the hybrid system”.

Normal starting procedure

Insert the key and press the “POWER” switch briefly and firmly with the brake pedal depressed. The “READY” light starts blinking. After a few seconds, the blinking “READY” light remains on and two beeps sound. (If the ambient temperature is low, such as during winter driving conditions, it may take time until the “READY” light is on.)

The engine may not start even with the “READY” light on.

You may hear a motor sound in the engine compartment when the brake pedal is depressed with the hybrid system off.

When the hybrid system is started or stopped, you may hear a sound coming from the hybrid battery in the luggage compartment. However, this does not indicate any trouble.

If there is a problem somewhere in the hybrid system, the hybrid system malfunction warning light will come on in place of the “READY” light. If this happens, contact your Toyota dealer.

CAUTION

Never start the hybrid system from outside the vehicle, or an accident may occur. Be sure to sit on the driver seat, then start the system when driving.

NOTICE

- ***The hybrid system cannot be started when the shift position is “N”. Be sure to put it in “P” and then start the system.***
- ***If any warning light comes on (See page 107 for details.) or the 12 volt battery is disconnected, the hybrid system may not start by pushing the “POWER” switch. In that case, push it once again. If the “READY” light does not come on, contact your Toyota dealer.***
- ***When you start the hybrid system at a lowered outside temperature, it may take longer before the blinking “READY” light changes to stay on.***

Not For Reproduction

Pre–trip safety check

It is a good idea to do a safety check before starting out on a trip. A few minutes of checking can help ensure safe and pleasant driving. Just a basic familiarity with your vehicle is required and a careful eye! Or, if you would like, your Toyota dealer will be pleased to make this check for you at a nominal cost.

CAUTION

If you make this check in an enclosed garage, make sure there is adequate ventilation. Engine exhaust is poisonous.

BEFORE STARTING THE HYBRID SYSTEM

Outside the vehicle

Tires. Check the pressure with a gauge and look carefully for cuts, damage, or excessive wear.

Wheel nuts. Make sure no nuts are missing or loose.

Fluid leaks. After the vehicle has been parked for a while, check underneath for leaking fuel, oil, water, or fluid. (Water dripping from the air conditioning after use is normal.)

Lights. Make sure the headlights, stop lights, tail lights, turn signals and other lights are all working. Check the headlight aim.

Inside the vehicle

Spare tire, jack and wheel nut wrench. Check the tire pressure and make sure you have your jack and wheel nut wrench.

Seat belts. Check that the buckles lock securely. Make sure the belts are not worn or frayed.

Instruments and controls. Especially make sure the service reminder indicators, instrument lights, and defroster are working.

Brakes. Make sure the pedal has enough clearance.

12 volt battery and cables. Look for corroded or loose terminals and a cracked case. Check the cables for good condition and connections.

In the engine compartment

Spare fuses. Make sure you have spare fuses. They should cover all the amperage ratings designated on the fuse box lid.

Coolant level. Make sure the coolant level is correct. (See page 274 for instructions.)

Wiring. Look for damaged, loose, or disconnected wires.

Fuel lines. Check the lines for leaks or loose connections.

Not For Reproduction

AFTER STARTING THE HYBRID SYSTEM

Exhaust system. Listen for any leakage. Have any leaks fixed immediately. (See “Engine exhaust cautions” on page 214.)

Engine oil level. Stop the hybrid system and check the dipstick with the vehicle parked on level spot. (See page 272 for instructions.)

WHILE DRIVING

Instruments. Make sure the speedometer and gauges are working.

Brakes. In a safe place, check that the brakes do not pull to one side when applied.

Anything unusual? Look for loose parts and leaks. Listen for abnormal noises.

If everything looks O.K., set your mind at ease and enjoy your trip!

Tips for driving in various conditions

- Always slow down in gusty crosswinds. This will allow you much better control.
- Drive slowly onto curbs and, if possible, at a right angle. Avoid driving onto high, sharp–edged objects and other road hazards. Failure to do so can lead to severe tire damage such as a tire burst.
  Drive slowly when passing over bumps or travelling on a bumpy road. Otherwise, the impact could cause severe damage to the tires and/or wheels.
- When parking on a hill, turn the front wheels until they touch the curb so that the vehicle will not roll. Apply the parking brake, and push the "P" position switch. If necessary, block the wheels.
- Washing your vehicle or driving through deep water may get the brakes wet. To see whether they are wet, check that there is no traffic near you, and then press the pedal lightly. If you do not feel a normal braking force, the brakes are probably wet. To dry them, drive the vehicle cautiously while lightly pressing the brake pedal with the parking brake applied. If they still do not work safely, pull to the side of the road and call a Toyota dealer for assistance.

⚠ CAUTION

- **Before driving off, make sure the parking brake is fully released and the parking brake reminder light is off.**
- **Do not leave your vehicle unattended with the "READY" light on.**
- **Do not rest your foot on the brake pedal while driving. It can cause dangerous overheating, needless wear, and poor fuel economy.**
- **To drive down a long or steep hill, reduce your speed and downshift. Remember, if you ride the brakes excessively, they may overheat and not work properly.**
- **Be careful when accelerating or braking on a slippery surface. Sudden acceleration or engine braking, could cause the vehicle to skid or spin.**
- **Do not continue normal driving when the brakes are wet. If they are wet, your vehicle will require a longer stopping distance, and it may pull to one side when the brakes are applied. Also, the parking brake will not hold the vehicle securely.**

Not For Reproduction

Driving in the rain

Driving on a slippery road surface

Drive carefully when it is raining, because visibility will be reduced, the windows may become fogged–up, and the road will be slippery.

- Drive carefully when it starts to rain, because the road surface will be especially slippery.
- Refrain from high speeds when driving on an expressway in the rain, because there may be a layer of water between the tires and the road surface, preventing the steering and brakes from operating properly.

CAUTION

- **Sudden braking, acceleration and steering when driving on a slippery road surface may cause tire slippage and reduce your ability to control the vehicle, resulting in an accident.**
- **Sudden changes in engine speed, such as sudden engine braking, may cause the vehicle to skid, resulting in an accident.**
- **After driving through a puddle, lightly depress the brake pedal to make sure that the brakes are functioning properly. Wet brake pads may prevent the brakes from functioning properly. If the brakes on only one side are wet and not functioning properly, steering control may be affected, resulting in an accident.**

Not For Reproduction

When encountering flooded roads

Do not drive on a road that has flooded after heavy rain etc. Doing so may cause serious damage to the vehicle.

NOTICE

Driving on a flooded road may cause the engine to stall as well as cause serious vehicle malfunctions such as shorts in electrical components and engine damage from water immersion. In the event that you drive on a flooded road and the vehicle is flooded, be sure to have your Toyota dealer check brake function, changes in quantity and quality of engine oil, transaxle fluid for the hybrid system, etc. and lubricant condition for the bearings and suspension joints (where possible) and the function of all joints and bearings.

Winter driving tips

Make sure you have a proper freeze protection for engine coolant.

Only use “Toyota Super Long Life Coolant” or similar high quality ethylene glycol based non–silicate, non–amine, non–nitrite, and non–borate coolant with long–life hybrid organic acid technology. (Coolant with long–life hybrid organic acid technology is a combination of low phosphates and organic acids.)

See “Checking the coolant level” on page 274 for details of coolant type selection.

“Toyota Super Long Life Coolant” is a mixture of 50% coolant and 50% deionized water. This coolant provides protection down to about –35°C (–31°F).

NOTICE
Do not use plain water alone.

Check the condition of the 12 volt battery and cables.

Cold temperatures reduce the capacity of any 12 volt battery, so it must be in top shape to provide enough power for winter starting. Section 8–3 tells you how to visually inspect the 12 volt battery. Your Toyota dealer will be pleased to check the level of charge.

Make sure the engine oil viscosity is suitable for the cold weather.

See page 273 for recommended viscosity. Leaving a heavy summer oil in your vehicle during winter months may cause harder starting. If you are not sure about which oil to use, call your Toyota dealer.

Keep the door locks from freezing.

Squirt lock de–icer or glycerine into the locks to keep them from freezing.

Use a washer fluid containing an anti–freeze solution.

This product is available at your Toyota dealer and most auto parts stores. Follow the manufacturer’s directions for how much to mix with water.

NOTICE
Do not use engine antifreeze or any other substitute because it may damage your vehicle’s paint.

Do not use your parking brake when there is a possibility it could freeze.

When parking, push the “P” position switch and block the rear wheels. Do not use the parking brake, for snow or water accumulated in and around the parking brake mechanism may freeze, making it hard to release.

Keep ice and snow from accumulating under the fenders.

Ice and snow built up under your fenders can make steering difficult. During extreme winter driving, stop and check under the fenders occasionally.

Depending on where you are driving, we recommend you carry some emergency equipment.

Some of the things you might put in the vehicle are tire chains, window scraper, bag of sand or salt, flares, small shovel, jumper cables, etc.

Not For Reproduction

Trailer towing

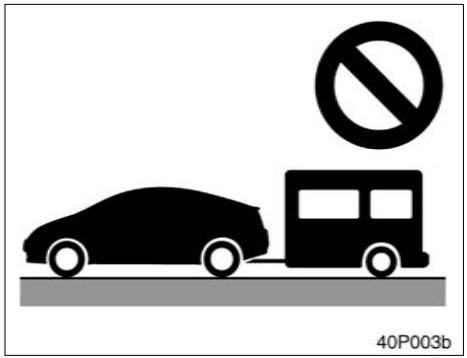

Toyota does not recommend towing a trailer with your Toyota. It is not designed for trailer towing.

How to save fuel and make your vehicle last longer, too

Improving fuel economy is easy–just take it easy. It will help make your vehicle last longer, too. Here are some specific tips on how to save money on both fuel and repairs:

- **Keep your tires inflated at the correct pressure.** Underinflation causes tire wear and wastes fuel. See page 276 for instructions.
- **Do not carry unneeded weight in your vehicle.** Excess weight puts a heavier load on the engine, causing greater fuel consumption.
- **Accelerate slowly and smoothly.** Avoid jackrabbit starts.
- **Avoid continuous speeding up and slowing down.** Stop–and–go driving wastes power.
- **Avoid unnecessary stopping and braking.** Maintain a steady pace. Try to time the traffic signals so you only need to stop as little as possible or take advantage of through streets to avoid traffic lights. Keep a proper distance from other vehicles to avoid sudden braking. This will also reduce wear on your brakes.
- **Avoid heavy traffic or traffic jams whenever possible.**
- **Do not rest your foot on the brake pedal.** This causes premature wear, overheating and poor fuel economy.
- **Maintain a moderate speed on highways.** The faster you drive, the greater the fuel consumption. By reducing your speed, you will cut down on fuel consumption.
- **Keep the front wheels in proper alignment.** Avoid hitting the curb and slow down on rough roads. Improper alignment not only causes faster tire wear but also puts an extra load on the engine, which, in turn, wastes fuel.
- **Keep the bottom of your vehicle free from mud, etc.** This not only lessens weight but also helps prevent corrosion.
- **Keep your vehicle tuned–up and in top shape**. A dirty air cleaner, improper valve clearance, dirty plugs, dirty oil and grease, brakes not adjusted, etc. all lower engine performance and contribute to poor fuel economy. For longer life of all parts and lower operating costs, keep all maintenance work on schedule, and if you often drive under severe conditions, see that your vehicle receives more frequent maintenance. (See page 261.)

Not For Reproduction

CAUTION

Never turn off the hybrid system to coast down hills. Your power steering and brake booster will not function without the hybrid system running. Also, the emission control system operates properly only when the hybrid system is running.

Not For Reproduction

SECTION 5

IN CASE OF AN EMERGENCY

If your vehicle will not start 236
If your hybrid system stalls while driving 240
If your vehicle overheats 240
If you have a flat tire 241
If your vehicle needs to be towed 248
If you lose your keys 251
If you cannot operate back door opener 252

Not For Reproduction

If your vehicle will not start—
(a) Simple checks

Before making these checks, make sure you have followed the correct starting procedure given in “How to start the hybrid system” on page 226 and that you have sufficient fuel. Also check whether the other keys will start the hybrid system. If they work, your key may be broken. Have the key checked at your Toyota dealer. If none of your keys work, there may be a malfunction in the hybrid vehicle immobilizer system. Call your Toyota dealer. (See “Keys” on page 18.)

If the instrument cluster dims or the instrument cluster display turns off with the hybrid system on—

1. Check that the 12 volt battery terminals are tight and clean.
2. If the 12 volt battery terminals are O.K., the 12 volt battery is discharged. You may try jump starting. See “(b) Jump starting” for further instructions.

NOTICE
Hybrid vehicles cannot be push-started.

If the instrument cluster is shown in appropriate brightness when the hybrid system is in the “IG-ON” mode—

The hybrid vehicle system is suspected to be faulty. Contact your Toyota dealer.

Not For Reproduction

(b) Jump starting

If the 12 volt battery is discharged, the hybrid system can be started by jump starting. Depending on the the vehicle condition, the engine may not start.

To avoid serious personal injury and damage to your vehicle which might result from battery explosion, acid burns, electrical burns, or damaged electronic components, these instructions must be followed precisely.

If the 12 volt battery is discharged, you cannot access to the 12 volt battery in the luggage compartment because the back door cannot be opened. Use the exclusive jump starting terminal in the engine compartment. For details, see “JUMP STARTING PROCEDURE” on page 237.

NOTICE
If the 12 volt battery is discharged with the transaxle in “P”, your vehicle cannot be moved unless the front wheels are raised. This is because the front wheels are locked by means of the parking lock mechanism.

If you are unsure about how to follow this procedure, we strongly recommend that you seek the help of a competent mechanic or towing service.

⚠ CAUTION

- **Booster battery contains sulfuric acid which is poisonous and corrosive. Wear protective safety glasses when jump starting, and avoid spilling acid on your skin, clothing, or vehicle.**
- **If you should accidentally get acid on yourself or in your eyes, remove any contaminated clothing and flush the affected area with water immediately. Then get immediate medical attention. If possible, continue to apply water with a sponge or cloth while en route to the medical office.**
- **The gas normally produced by a battery will explode if a flame or spark is brought near. Use only standardized jumper cables and do not smoke or light a match while jump starting.**

NOTICE

- ***The battery used for boosting must be 12 V. Do not jump start unless you are sure that the booster battery is correct.***
- ***After jump starting procedure, the hybrid system may not start by pushing the "POWER" switch. In that case, push it once again. If the "READY" light does not come on, contact your Toyota dealer.***
- ***The exclusive jump starting terminal is to be used when charging the 12 volt battery from another vehicle in an emergency. It cannot be used to jump start another vehicle.***

Not For Reproduction

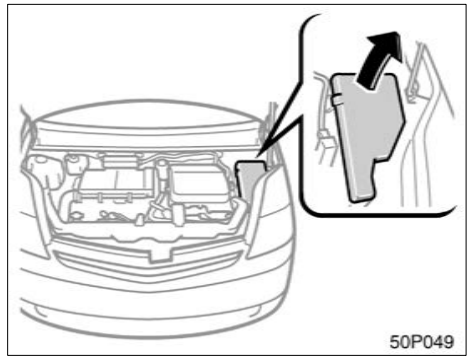

JUMP STARTING PROCEDURE

1. Apply the parking brake and turn off the headlight switch and interior light.
2. Turn off the hybrid system and remove the key if inserted.
3. Open the hood and fuse block cover shown in the above illustration.

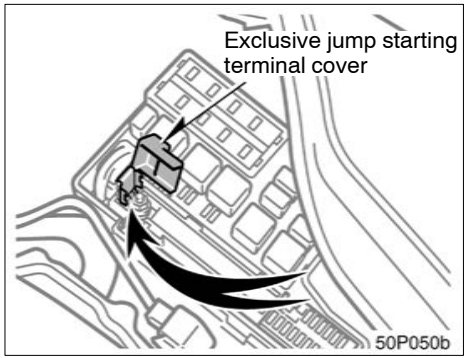

4. Open the exclusive jump starting terminal cover.
5. If the booster battery is installed in another vehicle, make sure the vehicles are not touching. Turn off all unnecessary lights and accessories.

   When boosting, use the battery of matching or higher quality. Any other battery may be difficult to jump start with. If jump starting is difficult, charge the battery for several minutes.
6. If required, remove all the vent plugs from the booster batteries. Lay a cloth over the open vents on the batteries. (This helps reduce the explosion hazard, personal injuries and burns.)
7. If the engine in the vehicle with the booster battery is not running, start it and let it run for a few minutes. During jump starting, run the engine at about 2000 rpm with the accelerator pedal lightly depressed.

Not For Reproduction

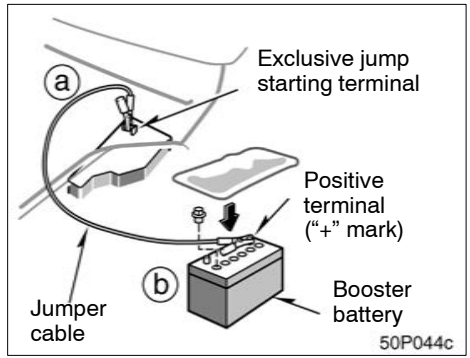

8. Connect the jumper cables in the order a, b, c, d.
   a. Connect the clamp of the positive (red) jumper cable to the exclusive jump starting terminal.
   b. Connect the clamp at the other end of the positive (red) jumper cable to the positive (+) terminal on the booster battery.

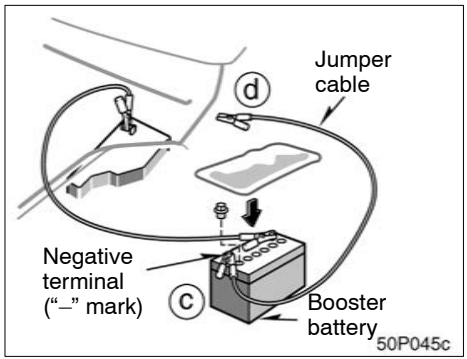

c. Connect the clamp of the negative (black) jumper cable to the negative (–) terminal on the booster battery.

d. Connect the clamp at the other end of the negative (black) jumper cable to a solid, stationary, unpainted, metallic point of the vehicle with the discharged battery.

The recommended connecting point is shown in the following illustration:

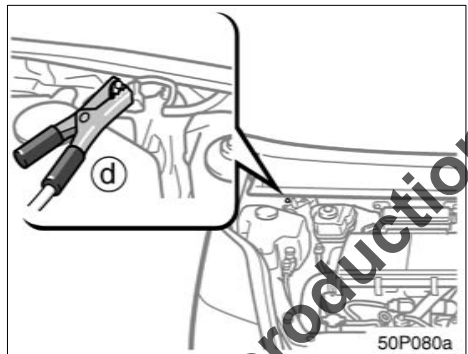

Connecting point

CAUTION

When making the connections, to avoid death or serious injury, do not lean over the battery or accidentally let the jumper cables or clamps touch anything except the correct battery terminals or the ground.

9. Charge the discharged battery with the jumper cables connected for approximately 5 minutes. At this time, run the engine in the vehicle with the booster battery at about 2000 rpm with the accelerator pedal lightly depressed.

10. Start the hybrid system. Make sure the "READY" light is on. If the hybrid battery warning light comes on in the multi–information display, the hybrid battery is also discharged. Contact your Toyota dealer.

11. Carefully disconnect the cables in the exact reverse order: the negative cable and then the positive cable.

12. Carefully dispose of the battery cover cloths—they may now contain sulfuric acid.

13. If removed, replace all the battery vent plugs.

If the cause of your 12 volt battery discharging is not apparent (for example, lights left on), you should have it checked at your Toyota dealer.

If the first start attempt is not successful...

Check that the clamp on the jumper cables are tight. Recharge the discharged battery with the jumper cables connected for several minutes and restart your hybrid system in the normal way.

If the another attempt is not successful, the battery may be depleted. Have it checked at your Toyota dealer.

Not For Reproduction

If your hybrid system stalls while driving

If your hybrid system stalls while driving...

1. Reduce your speed gradually, keeping a straight line. Move cautiously off the road to a safe place.
2. Turn on your emergency flashers.
3. Try starting the hybrid system again.

If the hybrid system will not start, see “If your vehicle will not start” on page 236.

CAUTION

If the hybrid system is not operating, the power assist for the brakes and steering will not work so steering and braking will be much harder than usual.

If your vehicle overheats

If your high coolant temperature warning light comes on, if you experience a loss of power, or if you hear a loud knocking or pinging noise, the hybrid system has probably overheated. You should follow this procedure...

1. Pull safely off the road, stop the vehicle and turn on your emergency flashers. Push the “P” position switch and apply the parking brake. Turn off the air conditioning if it is being used.
2. If coolant or steam is boiling out of the radiator or reservoir, stop the hybrid system. Wait until the steam subsides before opening the hood. If there is no coolant boiling over or steam, leave the hybrid system running and make sure the electric cooling fan is operating. If it is not, turn the hybrid system off.

CAUTION

To help avoid personal injury, keep the hood closed until there is no steam. Escaping steam or coolant is a sign of very high pressure.

3. Look for obvious coolant leaks from the radiator, hoses, and under the vehicle. However, note that water draining from the air conditioning is normal if it has been used.

CAUTION

When the hybrid system is running, keep hands and clothing away from the moving fan and engine drive belts.

4. If the coolant is leaking, stop the hybrid system immediately. Call a Toyota dealer for assistance.
5. If there are no obvious leaks, check the coolant reservoir. If it is dry, add coolant to the reservoir while the hybrid system is running. Fill it about half full.

CAUTION

Do not attempt to remove the radiator cap when the hybrid system and radiator are hot. Serious injury could result from scalding hot fluid and steam blown out under pressure.

Not For Reproduction

6. After the coolant temperature has cooled to normal, again check the coolant level in the reservoir. If necessary, bring it up to half full again. Serious coolant loss indicates a leak in the system. You should have it checked as soon as possible at your Toyota dealer.

If you have a flat tire—

1. Reduce your speed gradually, keeping a straight line. Move cautiously off the road to a safe place well away from the traffic. Avoid stopping on the center divider of a highway. Park on a level spot with firm ground.
2. Stop the hybrid system and turn on your emergency flashers.
3. Firmly set the parking brake.
4. Have everyone get out of the vehicle on the side away from traffic.
5. Read the following instructions thoroughly.

⚠ CAUTION

When jacking, be sure to observe the following to reduce the possibility of death or serious injury:

- **Follow jacking instructions.**
- **Do not put any part of your body under the vehicle supported by a jack. Otherwise, personal injury may occur.**
- **Do not start or run the hybrid system while your vehicle is supported by the jack.**
- **Stop the vehicle at a level firm ground, firmly set the parking brake. Block the wheel diagonally opposite to the one being changed if necessary.**
- **Make sure to set the jack properly in the jack point. Raising the vehicle with jack improperly positioned will damage the vehicle or may allow the vehicle to fall off the jack and cause personal injury.**
- **Never get under the vehicle when the vehicle is supported by the jack alone; use vehicle support stands.**
- **Use the jack only for lifting your vehicle during wheel changing.**
- **Do not raise the vehicle with someone in the vehicle.**
- **When raising the vehicle, do not place any objects on top of or underneath the jack.**
- **Raise the vehicle only high enough to remove and change the tire.**

Not For Reproduction

NOTICE

Do not continue driving with a deflated tire. Driving even a short distance can damage a tire and wheel beyond repair.

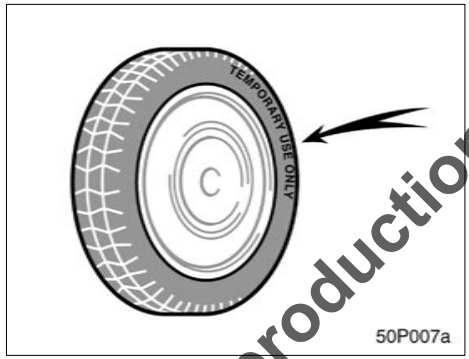

Compact spare tire

The compact spare tire is designed for temporary emergency use only.

The compact spare tire is identified by the distinctive wording “TEMPORARY USE ONLY” molded into the side wall of the tire.

The compact spare tire saves space in your luggage compartment, and its lighter weight helps to improve fuel economy and permits easier installation in case of a flat tire.

The compact spare tire can be used many times, if necessary. It has tread life of up to 4800 km (3000 miles) depending on road conditions and your driving habits. When treadwear indicators appear on the tire, replace the tire.

See also the tire information on page 277 for details on the treadwear indicators and other service information.

⚠ CAUTION

- **The compact spare tire was designed especially for your Toyota. Do not use it on any other vehicle.**
- **Do not use more than one compact spare tire at the same time.**
- **Do not exceed 80 km/h (50 mph) when driving with the compact spare tire.**
- **Replace the compact spare tire with the standard tire as soon as possible.**
- **Avoid sudden acceleration, sudden deceleration and sharp turns with the compact spare tire.**

Not For Reproduction

—Required tools and spare tire

NOTICE

- ***Your ground clearance is reduced when the compact spare tire is installed so avoid driving over obstacles and drive slowly on rough, unpaved roads and speed bumps. Also, do not attempt to go through an automatic car wash as the vehicle may get caught, resulting in damage.***
- ***Temporary spare tyres fitted to this vehicle must have a maximum load rating of not less than 710 kg or a load index of 96 and a speed category symbol of not less than M (130 km/h). See page 299 for tire size.***

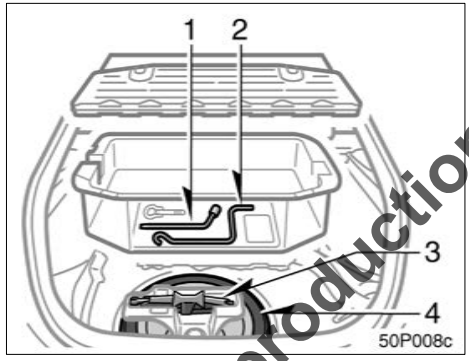

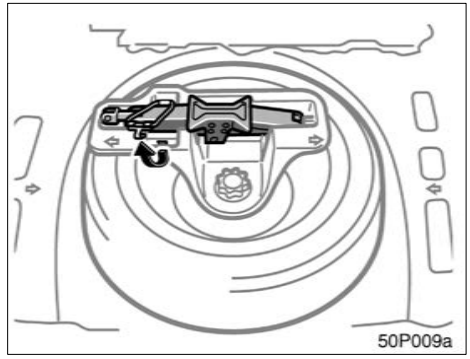

1. Get the required tools and spare tire.

1 Wheel nut wrench
2 Jack handle
3 Jack
4 Spare tire

To open the luggage storage box, see “Luggage storage box” on page 208.

To prepare yourself for an emergency, you should familiarize yourself with the use of the jack, each of the tools and their storage locations.

To remove the jack, unlock the tightening strap.

To store the jack, make sure it is securely held by the tightening strap.

Not For Reproduction

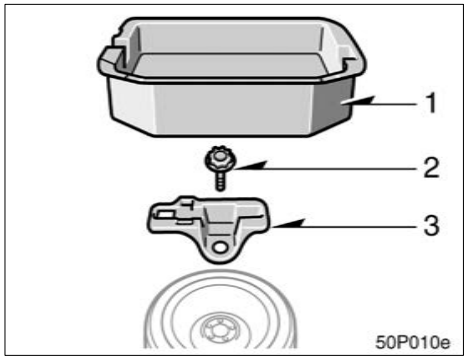

To remove the spare tire:

1. Remove the luggage storage box.
2. Loosen the bolt and remove it.
3. Remove the jack box.

Then take the spare tire out of the vehicle.

When storing the spare tire, put it in place with the inner side of the wheel facing up. Then secure the tire by repeating the above removal steps in reverse order to prevent it from flying forward during a collision or sudden braking.

When installing the jack box, align the arrows on the jack box with the ones on the body.

—Blocking the wheel

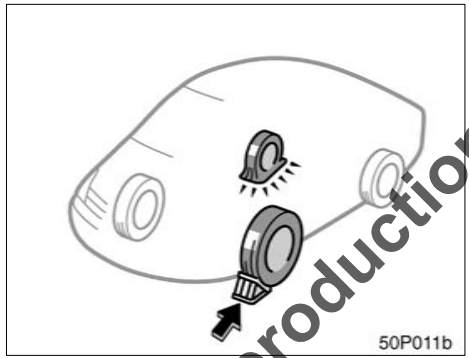

2. Block the wheel diagonally opposite the flat tire to keep the vehicle from rolling when it is jacked up.

When chocking the wheel, place a wheel block in front of one of the front wheels or behind one of the rear wheels.

—Loosening wheel nuts

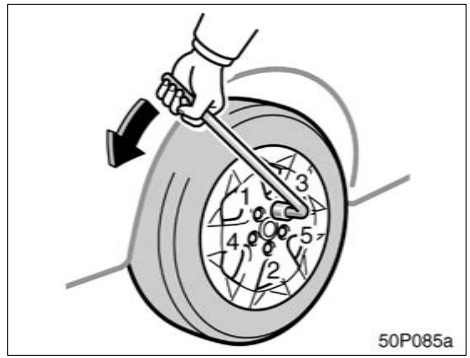

3. Loosen all the wheel nuts.

Always loosen the wheel nuts before raising the vehicle.

Turn the wheel nuts counterclockwise to loosen them. To get maximum leverage, fit the wrench to the nut so that the handle is on the right side, as shown above. Grab the wrench near the end of the handle and pull up on the handle. Be careful that the wrench does not slip off the nut.

Do not remove the nuts yet—just unscrew them about one–half turn in the order shown.

Not For Reproduction

CAUTION

Never use oil or grease on the bolts or nuts. The nuts may loosen and the wheels may fall off, which could cause a serious accident.

—Positioning the jack

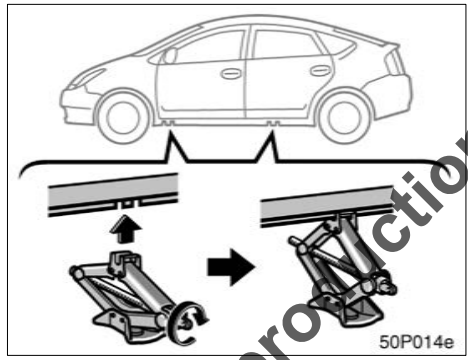

4. Position the jack at the jack points as shown.

Make sure the jack is positioned on a level and solid place.

—Raising your vehicle

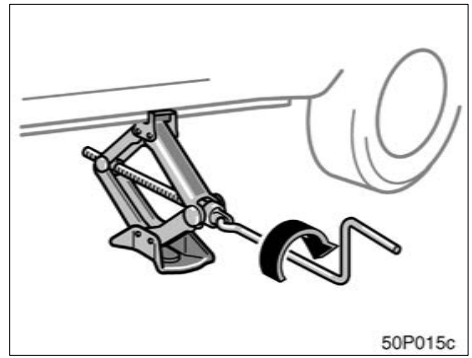

5. After making sure no one is in the vehicle, raise it high enough so that the spare tire can be installed.

Remember you will need more ground clearance when putting on the spare tire than when removing the flat tire.

To raise the vehicle, insert the jack handle into the jack (it is a loose fit) and turn it clockwise. As the jack touches the vehicle and begins to lift, double–check that it is properly positioned.

Not For Reproduction

—Changing wheels

⚠ CAUTION

Never get under the vehicle when the vehicle is supported by the jack alone; use vehicle support stands.

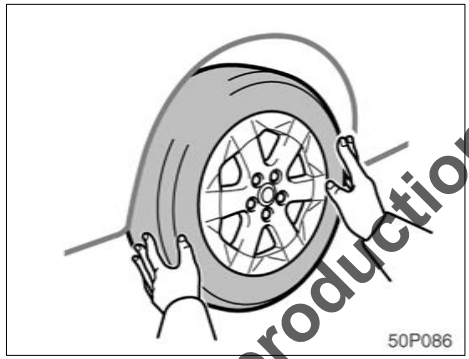

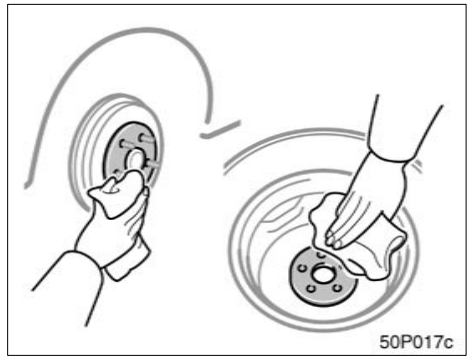

6. Remove the wheel nuts and change tires.

Lift the flat tire straight off and put it aside.

Roll the spare wheel into position and align the holes in the wheel with the bolts. Then lift up the wheel and get at least the top bolt started through its hole. Wiggle the tire and press it back over the other bolts.

Before putting on wheels, remove any corrosion on the mounting surfaces with a wire brush or such. Installation of wheels without good metal–to–metal contact at the mounting surface can cause wheel nuts to loosen and eventually cause a wheel to come off while driving. Therefore after the first 1600 km (1000 miles), check to see that the wheel nuts are tight.

Not For Reproduction

—Reinstalling wheel nuts

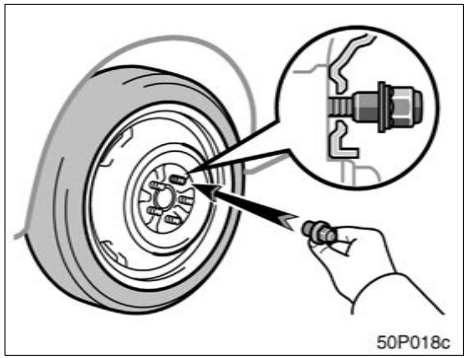

7. Reinstall all the wheel nuts finger tight.

Reinstall the wheel nuts (tapered end inward) and tighten them as much as you can by hand. Press back on the tire and see if you can tighten them more.

⚠ CAUTION

Never use oil or grease on the bolts or nuts. Doing so may lead to overtightening the nuts and damaging the bolts. The nuts may loosen and the wheels may fall off, which could cause a serious accident. If there is oil or grease on any bolt or nut, clean it.

—Lowering your vehicle

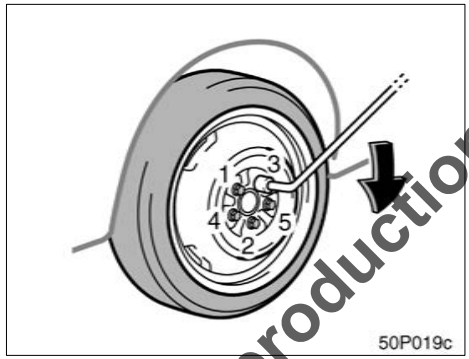

8. Lower the vehicle completely and tighten the wheel nuts.

Turn the jack handle counterclockwise to lower the vehicle.

Use only the wheel nut wrench to tighten the nuts. Do not use other tools or any additional leverage other than your hands, such as a hammer, pipe or your foot. Make sure the wrench is securely engaged over the nut.

Tighten each nut a little at a time in the order shown. Repeat the process until all the nuts are tight.

⚠ CAUTION

- **When lowering the vehicle, make sure all portions of your body and all other persons around will not be injured as the vehicle is lowered to the ground.**
- **Have the wheel nuts tightened with torque wrench to 103 N·m (10.5 kgf·m, 76ft·lbf), as soon as possible after changing wheels. Otherwise, the nuts may loosen and the wheels may fall off, which could cause a serious accident.**
- **Do not attach a heavily damaged plastic wheel ornament. It may fly off the wheel and cause accidents while the vehicle is moving.**

Not For Reproduction

—After changing wheels

9. Check the air pressure of the replaced tire.

Adjust the air pressure to the specification designated on page 299. If the pressure is lower than specified, drive slowly to the nearest Toyota dealer and fill to the correct pressure.

Do not forget to reinstall the tire inflation valve cap as dirt and moisture could get into the valve core and possibly cause air leakage. If the cap is missing, have a new one put on as soon as possible.

10. Restow all the tools, jack and flat tire securely.

As soon as possible after changing wheels, tighten the wheel nuts to the torque specified on page 299 with a torque wrench. Have a technician repair the flat tire and replace the spare tire with it.

CAUTION

Before driving, make sure all the tools, jack and flat tire are securely in place in their storage location to reduce the possibility of personal injury during a collision or sudden braking.

If your vehicle needs to be towed—

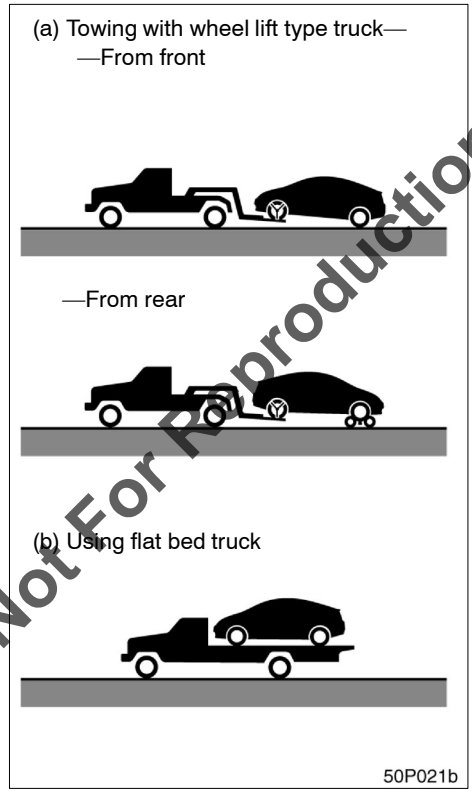

Not For Reproduction

If towing is necessary, we recommend you to have it done by your Toyota dealer or a commercial tow truck service. In consultation with them, have your vehicle towed using either (a) or (b).

Only when you cannot receive a towing service from a Toyota dealer or commercial tow truck service, tow your vehicle carefully in accordance with the instructions given in "—Emergency towing" on page 249.

Proper equipment will help ensure that your vehicle is not damaged while being towed. Commercial operators are generally aware of the state/provincial and local laws pertaining to towing.

Your vehicle can be damaged if it is towed incorrectly. Although most operators know the correct procedure, it is possible to make a mistake. To avoid damage to your vehicle, make sure the following precautions are observed. If necessary, show this page to the tow truck driver.

TOWING PRECAUTIONS:

Use a safety chain system for all towing, and abide by the state/provincial and local laws. The wheels and axle on the ground must be in good condition. If they are damaged, use a towing dolly.

(a) Towing with wheel lift type truck

From front—Release the parking brake.

NOTICE
When lifting wheels, take care to ensure adequate ground clearance for towing at the opposite end of the raised vehicle. Otherwise, the underbody of the towed vehicle will be damaged during towing.

From rear—Use a towing dolly under the front wheels.

NOTICE
Never tow a vehicle from the rear with the front wheels on the ground, as this may cause serious damage to the transmission.

(b) Using flat bed truck

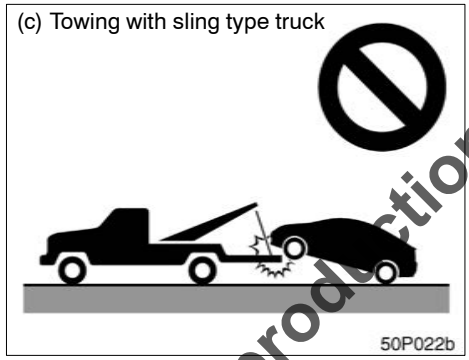

(c) Towing with sling type truck

NOTICE
Do not tow with sling type truck, either from the front or rear. This may cause body damage.

—Emergency towing

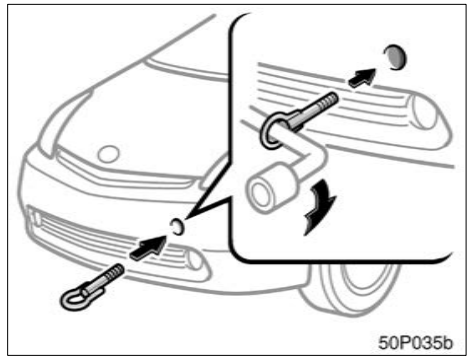

If towing is necessary, we recommend you to have it done by your Toyota dealer or a commercial tow truck service.

If towing service is not available in an emergency, your vehicle may be temporarily towed by a cable or chain secured to emergency towing eyelet inside of front bumper. Use extreme caution when towing vehicles.

Not For Reproduction

NOTICE

- ***Only use specified towing eyelet; otherwise your vehicle may be damaged.***
- ***Never tow a vehicle from the rear with four wheels on the ground. This may cause serious damage to the transaxle.***

A driver must be in the vehicle to steer it and operate the brakes.

Towing in this manner may be done only on hard–surfaced roads for a short distance and below 30 km/h (18 mph). Also, the wheels, axles, drive train, steering and brakes must all be in good condition.

⚠ CAUTION

Use extreme caution when towing vehicles. Avoid sudden starts or erratic driving maneuvers which would place excessive stress on the emergency towing eyelet and towing cable or chain. The eyelet and towing cable or chain may break and cause serious injury or damage.

NOTICE

Use only a cable or chain specifically intended for use in towing vehicles. Securely fasten the cable or chain to the towing eyelet provided.

Before towing, release the parking brake and put the hybrid transaxle in "N". The hybrid system must be in the "IG–ON" mode.

In the following cases, as the front wheels might be locked by means of the parking lock mechanism, your vehicle cannot be towed by another vehicle using a rope. Have your vehicle carried with the front wheels or all the wheels raised.

- If the parking mechanism fails.
- If the 12 volt battery is discharged.

⚠ CAUTION

If the hybrid system is not running, the power assist for the brakes and steering will not work so steering and braking will be much harder than usual.

Not For Reproduction

—Installing towing eyelet

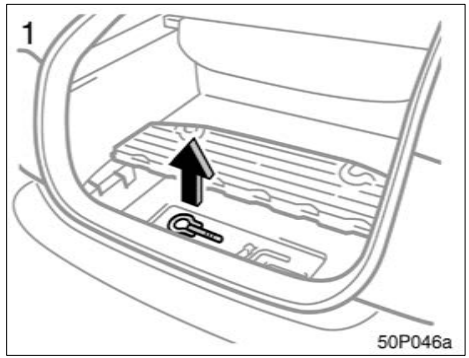

1. Remove the towing eyelet as shown in the illustration.

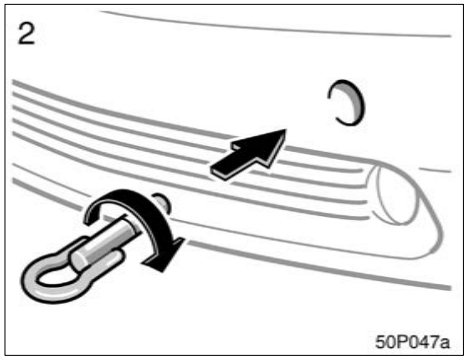

2. Secure the towing eyelet to the hole on the bumper by turning it clockwise.

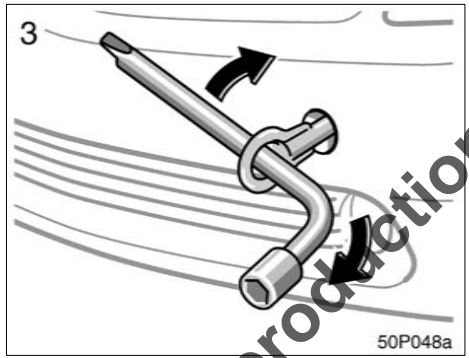

3. Tighten the towing eyelet securely by a wheel nut wrench.

CAUTION

When installing the eyelet on the vehicle, be sure to tighten the eyelet securely. If the eyelet is loose, it may come off when being towed and result in death or serious injury.

Not For Reproduction

If you lose your keys

You can purchase a new key at your Toyota dealer if you can give them the key number and master key.

Even if you lose only one key, contact your Toyota dealer to make a new key. If you lose all your master keys, you cannot make new keys; the whole hybrid vehicle immobilizer system must be replaced.

See the suggestion given in “Keys” on page 18.

If your keys are locked in the vehicle and you cannot get a duplicate, many Toyota dealers can still open the door for you, using their special tools. If you must break a window to get in, we suggest breaking the smallest side window because it is the least expensive to replace. Be extremely cautious to avoid cuts from the glass.

If you cannot operate back door opener

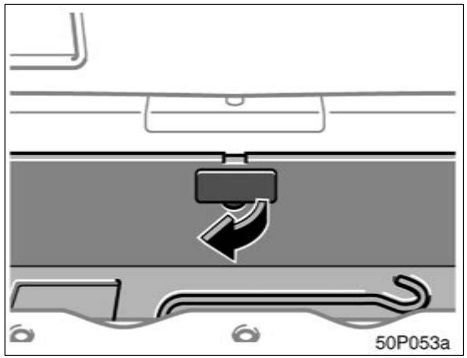

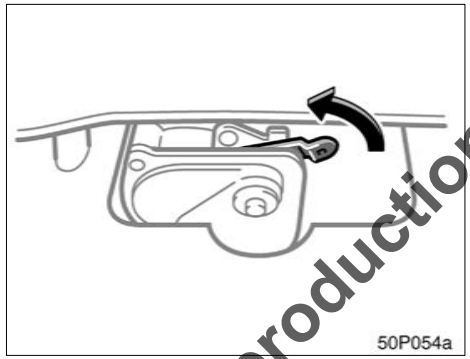

If the back door opener does not operate, you can open the back door from the inside.

To open the back door from inside, perform the following procedure.

1. Open the luggage storage box (See “Luggage storage box” on page 208.) and remove the cover.
2. Pull the lever with the back door motor, open the back door.

Be sure to have the back door opener checked/repaired by your Toyota dealer.

Not For Reproduction

SECTION 6

CORROSION PREVENTION AND APPEARANCE CARE

Protecting your Toyota from corrosion 254
Washing and waxing your Toyota 255
Cleaning the interior 257

Not For Reproduction

Protecting your Toyota from corrosion

Toyota, through the diligent research, design and use of the most advanced technology available, helps prevent corrosion and provides you with the finest quality vehicle construction. Now, it is up to you. Proper care of your Toyota can help ensure long–term corrosion prevention.

The most common causes of corrosion to your vehicle are:

- The accumulation of road salt, dirt and moisture in hard–to–reach areas under the vehicle.
- Chipping of paint, or undercoating caused by minor accidents or by stones and gravel.

Care is especially important if you live in particular areas or operate your vehicle under certain environmental conditions:

- Road salt or dust control chemicals will accelerate corrosion, as will the presence of salt in the air near the sea–coast or in areas of industrial pollution.
- High humidity accelerates corrosion especially when temperatures range just above the freezing point.
- Wetness or dampness to certain parts of your vehicle for an extended period of time, may cause corrosion even though other parts of the vehicle may be dry.
- High ambient temperatures can cause corrosion to those components of the vehicle which do not dry quickly due to lack of proper ventilation.

The above signifies the necessity to keep your vehicle, particularly the underside, as clean as possible and to repair any damage to paint or protective coatings as soon as possible.

To help prevent corrosion on your Toyota, follow these guidelines:

Wash your vehicle frequently. It is, of course, necessary to keep your vehicle clean by regular washing, but to prevent corrosion, the following points should be observed:

- If you drive on salted roads in the winter or if you live near the ocean, you should hose off the undercarriage at least once a month to minimize corrosion.
- Pay particular attention to the vehicle's underside and wheel housings as it is difficult to see all the mud and dirt. It will do more harm than good to simply wet the mud and debris without removing. The lower edge of doors, rocker panels and frame members have drain holes which should not be allowed to clog with dirt as trapped water in these areas can cause corrosion.
- Wash the underside of the vehicle thoroughly when winter is over.

See "Washing and waxing your Toyota" for more tips.

Check the condition of your vehicle's paint and trim. If you find any chips or scratches in the paint, touch them up immediately to prevent corrosion from starting. If the chips or scratches have gone through the bare metal, have a qualified body shop make the repair.

Not For Reproduction

Check the interior of your vehicle. Water and dirt can accumulate under the floor mats and could cause corrosion. Occasionally check under the mats to make sure the area is dry. Be particularly careful when transporting chemicals, cleansers, fertilizers, salt, etc.; these should be transported in proper containers. If a spill or leak should occur, immediately clean and dry the area.

Keep your vehicle in a well ventilated garage or a roofed place. Do not park your vehicle in a damp, poorly ventilated garage. If you wash your vehicle in the garage, or if you drive it covered with water or snow, your garage may be so damp as to cause corrosion. Even if your garage is heated, a wet vehicle can corrode if the ventilation is poor.

Washing and waxing your Toyota

Your Toyota is a hybrid vehicle. Pay particular attention when washing your Toyota.

NOTICE

Before washing your Toyota, be sure to observe the following in order to avoid the risk of damage to your vehicle.

- ***Do not splash water on the electric components in the engine compartment. This may cause the malfunction of the electric components.***

Washing your Toyota

Keep your vehicle clean by regular washing.

The following cases may cause weakness to the paint or corrosion to the body and parts. Wash your vehicle as soon as possible.

- When driving in a coastal area
- When driving on a road sprinkled with antifreeze
- When exposed to coal tar, tree sap, bird droppings and carcass of an insect
- When driving in areas where there is a lot of smoke, soot, dust, iron dust or chemical substances
- When the vehicle becomes remarkably dirty with dust and mud

Hand–washing your Toyota

Work in the shade and wait until the vehicle body is not warm to the touch.

⚠ CAUTION

- **When cleaning under floor or chassis, be careful not to injure your hands.**
- **Exhaust gasses cause the exhaust pipe to become quite hot. When washing the vehicle, be careful not to touch the pipe until it has cooled sufficiently, as touching a hot exhaust pipe can cause burns.**

1. Rinse off loose dirt with a hose. Remove any mud or road salt from the underside of the vehicle or the wheel wells.

Not For Reproduction

2. Wash with a mild car–wash soap, mixed according to the manufacturer's instructions. Use a soft cotton mitt and keep it wet by dipping it frequently into the wash water. Do not rub hard—let the soap and water remove the dirt.

Plastic wheel ornaments: The plastic wheel ornaments are damaged easily by organic substances. If any organic substances splash an ornament, be sure to wash them off with water and check if the ornament is damaged.

Aluminum wheels: Use only a mild soap or neutral detergent.

NOTICE

- ***Do not use corrosive chemical–based cleaners on your wheels. (Example: hydrofluoric acid)***
- ***Do not use steam cleaners or the chemicals therein to clean your wheels.***
- ***Do not use scouring pads, wire brushes, or coarse abrasives to clean your wheels.***
- ***Do not use alcohol, solvents, gasoline, or other non–neutral detergents, because they may alter the wheel's appearance and resistance to corrosion.***

Plastic bumpers: Wash carefully. Do not scrub with abrasive cleaners. The bumper faces are soft.

Exterior lights: Wash carefully. Do not use organic substances or scrub them with a hard brush. This may damage the surfaces of the lights.

Road tar: Remove with turpentine or cleaners that are marked safe for painted surfaces.

3. Rinse thoroughly—dried soap can cause streaking. In hot weather you may need to rinse each section right after you wash it.
4. To prevent water spots, dry the vehicle using a clean soft cotton towel. Do not rub or press hard—you might scratch the paint.

NOTICE

- ***Do not use organic substances (gasoline kerosene, benzine or strong solvents) which may be toxic or cause damage.***
- ***Do not scrub any part of the vehicle with a hard brush, which may cause damage.***

Automatic car wash

Your vehicle may be washed in an automatic car wash, but remember that the paint can be scratched by some types of brushes, unfiltered washing water, or the washing process itself. Scratching reduces paint durability and gloss, especially on darker colors. The manager of the car wash should be able to advise you whether the process is safe for the paint on your vehicle.

NOTICE

To prevent damage to the antenna, make sure to remove it before driving your Toyota through an automatic car wash.

Not For Reproduction

Waxing your Toyota

Polishing and waxing is recommended to maintain the original beauty of your Toyota's finish.

Apply wax once a month or if the vehicle surface does not repel water well.

1. Always wash and dry the vehicle before you begin waxing, even if you are using a combined cleaner and wax.
2. Use a good quality polish and wax. If the finish has become extremely weathered, use a car–cleaning polish, followed by a separate wax. Carefully follow the manufacturer's instructions and precautions. Be sure to polish and wax the chrome trim as well as the paint.

NOTICE
If a nozzle becomes blocked, do not try to clear it with a pin or other object. The nozzle will be damaged.

Exterior lights: Do not apply wax on the surfaces of the lights. Wax may cause damage to the lenses. If you accidentally put wax on the light surfaces, wipe or wash it off.

3. Wax the vehicle again when water does not bead but remains on the surface in large patches.

Touch–up paint

Touch–up paint may be used to cover small chips or scratches.

Apply the paint soon after the damage occurs or corrosion may set in. To do a good job, use a small artist's brush and stir the paint well. Make sure the area is clean and dry. To apply the touch–up paint so it is hardly noticeable, the trick is to apply it only to the bare spots. Apply only the smallest amount possible and do not paint the surface around the scratch or chip.

Not For Reproduction

Cleaning the interior

CAUTION
• **Do not splash or spill liquid in the vehicle, such as on the floor, in the hybrid battery (traction battery) air vents, or in the luggage compartment. Doing so may cause the hybrid battery, electrical components etc. to malfunction or catch fire.** • **Vehicles with side airbags: Be careful not to splash water or spill liquid on the floor. This may prevent the side airbags from activating correctly, resulting in death or serious injury.**

NOTICE
Do not wash the vehicle floor with water, or allow water to get onto the floor when cleaning the vehicle interior or exterior. Water may get into audio components or other electrical components above or under the vehicle carpet (or floor mat) and cause fire or malfunction; and it may cause body corrosion.

Vinyl interior

The vinyl upholstery may be easily cleaned with a mild soap or detergent and water.

First vacuum over the upholstery to remove loose dirt. Then, using a sponge or soft cloth, apply the soap solution to the vinyl. After allowing it to soak in for a few minutes to loosen the dirt, remove the dirt and wipe off the soap with a clean damp cloth. If all the dirt do not come off, repeat the procedure. Commercial foaming–type vinyl cleaners are also available which work well. Follow the manufacturer's instructions.

> ***NOTICE***
>
> ***Do not use solvent, thinner, gasoline or window cleaner on the interior.***

Carpets

Use a good foam–type shampoo to clean the carpets.

Begin by vacuuming thoroughly to remove as much dirt as possible. Several types of foam cleaners are available; some are in aerosol cans and others are powders or liquids which you mix with water to produce a foam. To shampoo the carpets, use a sponge or brush to apply the foam. Rub in overlapping circles.

Do not apply water—the best results are obtained by keeping the carpet as dry as possible. Read the shampoo instructions and follow them closely.

Seat belts

The seat belts may be cleaned with mild soap and water or with lukewarm water.

Use a cloth or sponge. As you are cleaning, check the belts for excessive wear, fraying, or cuts.

> ***NOTICE***
>
> ◆ ***Do not use dye or bleach on the belts–it may weaken them.***
>
> ◆ ***Do not use the belts until they become dry.***

Windows

> ***NOTICE***
>
> ◆ ***Do not use glass cleaner to clean the inside of the rear window, as this may cause damage to the rear window defogger heater wires. Use a cloth dampened with lukewarm water to gently wipe the window clean. Wipe the window in strokes running parallel to the heater wires.***
>
> ◆ ***When cleaning the inside of the rear window, be careful not to scratch or damage the heater wires.***

Not For Reproduction

Air conditioning control panel, audio, instrument panel, console panel, and switches

Use a soft damp cloth for cleaning.

Soak a clean soft cloth in water or lukewarm water then lightly wipe off dirt.

NOTICE

- ***Do not use organic substances (solvents, kerosene, alcohol, gasoline, etc.) or alkaline or acidic solutions. These chemicals can cause discoloring, staining or peeling of the surface.***
- ***If you use cleaners or polishing agents, make sure their ingredients do not include the substances mentioned above.***
- ***If you use a liquid car freshener, do not apply the liquid onto the vehicle's interior surfaces. It may contain the ingredients mentioned above. Immediately clean any spill using the method mentioned above.***

Leather interior

The leather upholstery may be cleaned with neutral detergent for wool.

Remove dirt using a soft cloth dampened with 5% solution of neutral detergent for wool. Then thoroughly wipe off all traces of detergent with a clean damp cloth.

After cleaning or whenever any part of the leather gets wet, dry with a soft clean cloth. Allow the leather to dry in a ventilated shaded area.

NOTICE

- ***If a stain should fail to come out with a neutral detergent, apply a cleaner that does not contain an organic solvent.***
- ***Never use organic substances such as benzine, alcohol or gasoline, or alkaline or acid solutions for cleaning the leather as these could cause discoloring.***
- ***Use of a nylon brush or synthetic fiber cloth, etc. may scratch the fine grained surface of the leather.***
- ***Mildew may develop on soiled leather upholstery. Be especially careful to avoid oil spots. Try to keep your upholstery always clean.***
- ***Long exposure to direct sunlight may cause the leather surface to harden and shrink. Keep your vehicle in a shaded area, especially in the summer.***
- ***The interior of your vehicle is apt to heat up on hot summer days, so avoid placing on the upholstery items made of vinyl or plastic or containing wax as these tend to stick to leather when warm.***
- ***Improper cleaning of the leather upholstery could result in discoloration or staining.***

If you have any questions about the cleaning of your Toyota, your local Toyota dealer will be pleased to answer them.

Not For Reproduction

Not For Reproduction

SECTION 7

MAINTENANCE REQUIREMENTS

Maintenance facts 262
Does your vehicle need repairing? 263

Not For Reproduction

Maintenance facts

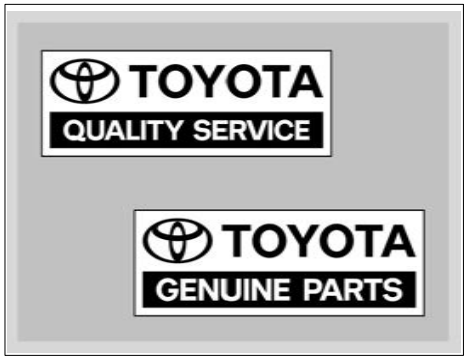

Regular maintenance is essential.

We urge you to protect your new vehicle by having your Toyota serviced according to the maintenance schedule given on the following pages. Regular maintenance will aid:

- Good fuel economy
- Long vehicle life
- Driving enjoyment
- Safety
- Reliability
- Warranty coverage
- Compliance with government regulations

Your Toyota has been designed for economical driving and economical maintenance. Many formerly required maintenance items are no longer required or are not required as often. To make sure your vehicle runs at peak efficiency, follow the maintenance schedule.

For full details of your maintenance schedule, read the separate "Warranty and Service Booklet".

Where to go for service?

It makes good sense to take your vehicle to your local Toyota dealer for service.

Toyota technicians are well–trained specialists. And they are receiving the latest service information through technical bulletins, service tips, and in–dealership training programs. They learn to work on Toyotas before they work on your vehicle, rather than while they are working on it. Doesn't that seem like the best way?

Your Toyota dealer has invested a lot of money in special Toyota tools and service equipment. It helps do the job better and at less cost.

Your Toyota dealer's service department will perform all of the scheduled maintenance on your vehicle—reliably and economically.

Not For Reproduction

What about do–it–yourself maintenance?

Many of the maintenance items are easy to do yourself if you have a little mechanical ability and a few basic automotive tools. Simple instructions for how to perform them are presented in Section 8.

Note, however, that some maintenance tasks require special tools and skills. These are best performed by qualified technicians. Even if you are an experienced do–it–yourself mechanic, we recommend that repairs and maintenance be conducted by your Toyota dealer who will keep a record of maintenance on your Toyota. This record could be helpful should you ever require Warranty Service.

The service interval for scheduled maintenance is determined by the odometer reading or time interval, whichever comes first, shown in the schedule.

Rubber hoses (for cooling and heater system, brake system and fuel system) should be inspected by a qualified technician in accordance with the Toyota maintenance schedule.

They are particularly important maintenance items. Have any deteriorated or damaged hoses replaced immediately. Note that rubber hoses will deteriorate with age, resulting in swelling, chafing or cracks.

Does your vehicle need repairing?

Be on the alert for changes in performance, sounds, and visual tip–offs that indicate service is needed. Some important clues are as follows:

- Engine missing, stumbling, or pinging
- Appreciable loss of power
- Strange engine noises
- A fluid leak under the vehicle (However, water dripping from the air conditioning after use is normal.)
- Change in exhaust sound (This may indicate a dangerous carbon monoxide leak. Drive with the windows open and have the exhaust system checked immediately.)
- Flat–looking tire; excessive tire squeal when cornering; uneven tire wear
- Vehicle pulls to one side when driving straight on a level road
- Strange noises related to suspension movement
- Loss of brake effectiveness; spongy feeling brake pedal; pedal almost touches floor; vehicle pulls to one side when braking
- Coolant temperature continually higher than normal

If you notice any of these clues, take your vehicle to your Toyota dealer as soon as possible. It probably needs adjustment or repair.

⚠ CAUTION

Do not continue driving with the vehicle unchecked. It could result in serious vehicle damage and possibly personal injury.

Not For Reproduction

Not For Reproduction

DO–IT–YOURSELF MAINTENANCE

Introduction

Engine compartment overview 266
Fuse locations 267
Do–it–yourself service precautions 268
Positioning the jack 270

Not For Reproduction

Engine compartment overview

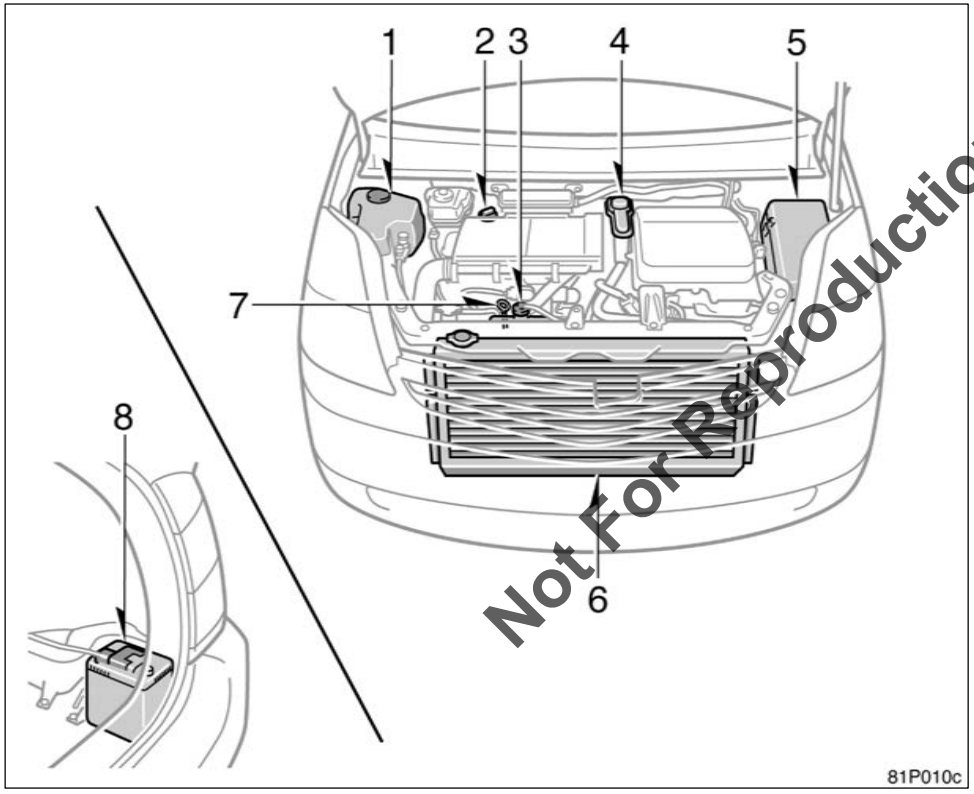

Not For Reproduction

1. Windshield washer fluid tank
2. Engine oil filler cap
3. Engine coolant reservoir
4. Inverter coolant reservoir
5. Fuse block
6. Radiator and condenser
7. Engine oil level dipstick
8. 12 volt battery
   (in luggage compartment)

Fuse locations

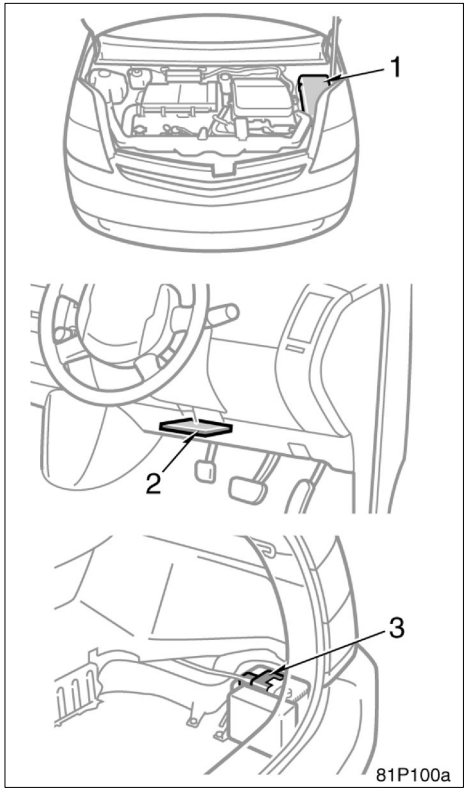

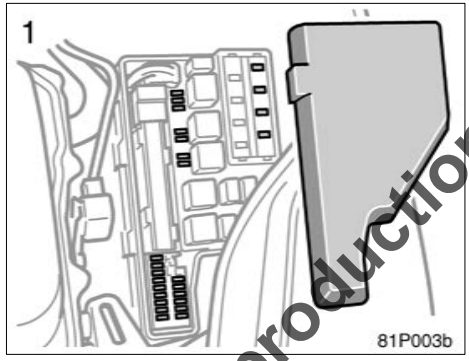

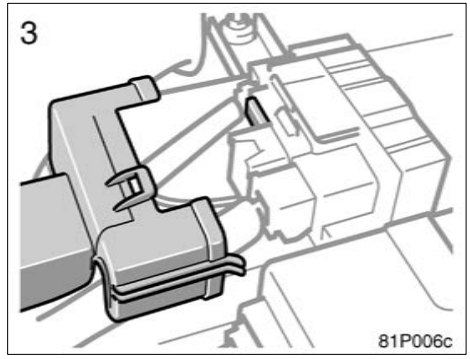

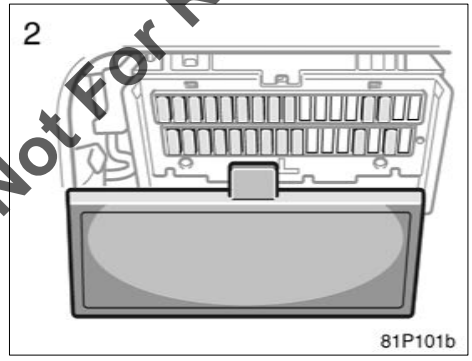

Not For Reproduction

Do–it–yourself service precautions

If you perform maintenance by yourself, be sure to follow the correct procedure given in this Section.

You should be aware that improper or incomplete servicing may result in operating problems.

This Section gives instructions only for those items that are relatively easy for an owner to perform. As explained in Section 7, there are still a number of items that must be done by a qualified technician with special tools.

Utmost care should be taken when working on your vehicle to prevent accidental injury. Here are a few precautions that you should be especially careful to observe:

⚠ CAUTION

- **When the hybrid system is on, keep hands, clothing, and tools away from the moving fan and engine drive belts. (Removing rings, watches, and ties is advisable.)**
- **Right after driving, the engine compartment—the engine, radiator, exhaust manifold and spark plug boots, etc.—will be hot. So be careful not to touch them. Oil, fluids and spark plugs may also be hot.**
- **If the hybrid system is hot, do not remove the radiator cap or loosen the drain plugs to prevent burning yourself.**
- **Do not leave anything that may burn easily, such as paper or rags, in the engine compartment.**
- **Do not smoke, cause sparks or allow open flames around fuel or the batteries. Their fumes are flammable.**
- **Be extremely cautious when working on the batteries. It contains poisonous and corrosive sulfuric acid or strong alkali.**
- **When the hybrid system is operating with the "READY" light on, the engine is automatically started in some case. When you inspect the engine compartment, be sure to press the "POWER" switch to the "OFF" mode.**
- **Do not get under your vehicle with just the body jack supporting it. Always use automotive jack stands or other solid supports.**
- **Be sure that the hybrid system is off if you work near the electric cooling fans or radiator grille. With the ignition on, the electric cooling fans will automatically start to run if the engine coolant temperature is high and/or the air conditioning is on.**
- **Use eye protection whenever you work on or under your vehicle where you may be exposed to flying or falling material, fluid spray, etc.**

Not For Reproduction

- **Used engine oil contains potentially harmful contaminants which may cause skin disorders such as inflammation or skin cancer, so care should be taken to avoid prolonged and repeated contact with it. To remove used engine oil from your skin, wash thoroughly with soap and water.**
- **Do not leave used oil within the reach of children.**
- **Dispose of used oil and filter only in a safe and acceptable manner. Do not dispose of used oil and filter in household trash, in sewers or onto the ground. Call your dealer for information concerning recycling or disposal.**
- **Take care when filling the brake fluid reservoir because brake fluid can harm your hands or eyes. If fluid gets on your hands or in your eyes, flush affected area with clean water immediately. If you still feel uncomfortable with your hands or eyes, go to the doctor.**

- **When servicing the vehicle with the smart entry and start system, be sure to keep the smart key away from the vehicle. If the key is left in the vehicle, the hybrid system may start by pressing the "POWER" switch with the brake pedal depressed.**

NOTICE

- ***Remember that batteries and ignition cable carry high currents or voltages. Be careful of accidentally causing a short circuit.***
- ***Add only "Toyota Super Long Life Coolant" or similar high quality ethylene glycol based non–silicate, non–amine, non–nitrite, and non–borate coolant with long–life hybrid organic acid technology to fill the radiator. And if you spill some of the coolant, be sure to wash it off with water to prevent it from damaging the parts or paint.***
- ***Do not allow dirt or anything else to fall through the spark plug holes.***
- ***Do not pry the outer electrode of spark plug against the center electrode.***
- ***Use only spark plugs of the specified type. Using other types will cause engine damage, loss of performance or radio noise.***
- ***If you spill the fluid, be sure to wash it off with water to prevent it from damaging the parts or paint.***
- ***Do not drive with the air cleaner filter removed, or excessive engine wear could result. Also backfiring could cause a fire in the engine compartment.***
- ***Be careful not to scratch the glass surface with the wiper frame.***
- ***When closing the hood, check to see that you have not forgotten any tools, rags, etc.***

Not For Reproduction

Positioning the jack

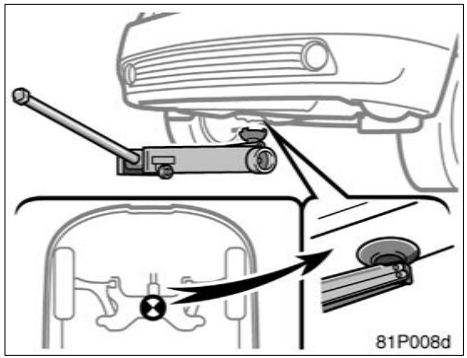

Front

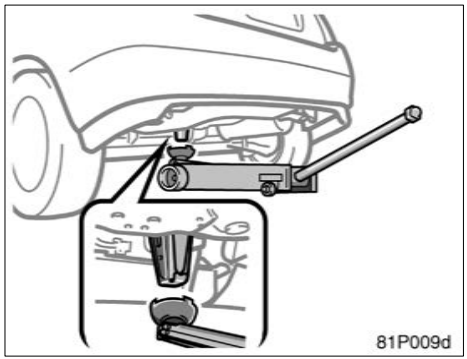

Rear

When jacking up your vehicle with the jack, position the jack correctly as shown in the illustrations.

⚠ CAUTION

When jacking, be sure to observe the following to reduce the possibility of death or serious injury:

- **Follow jacking instructions.**
- **Do not put any part of your body under the vehicle supported by the jack. Personal injury may occur.**
- **Do not start or run the engine while your vehicle is supported by the jack.**
- **Stop the vehicle on a level firm ground, firmly set the parking brake and put the transaxle in "P".**
- **Make sure to set the jack properly in the jack point. Raising the vehicle with jack improperly positioned will damage the vehicle or may allow the vehicle to fall off the jack and cause personal injury.**
- **Never get under the vehicle when the vehicle is supported by the jack alone; use vehicle support stands.**
- **Do not raise the vehicle with someone in the vehicle.**
- **When raising the vehicle, do not place any objects on top of or underneath the jack.**

NOTICE

Make sure to place the jack correctly, or your vehicle may be damaged.

Not For Reproduction

DO–IT–YOURSELF MAINTENANCE

Engine and Chassis

Checking the engine oil level 272
Checking the coolant level 274
Checking the radiator and condenser 275
Checking tire inflation pressure 276
Checking and replacing tires 277
Rotating tires 278
Installing snow tires and chains 279
Replacing wheels 280
Aluminum wheel precautions 281

Not For Reproduction

Checking the engine oil level

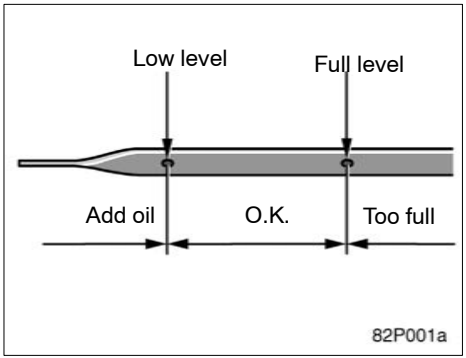

With the hybrid system at operating temperature and turned off, check the oil level on the dipstick.

1. To get a correct reading, the vehicle should be on level ground. After turning off the hybrid system, wait more than five minutes for the oil to drain back into the bottom of the engine.
2. Pull the dipstick out, hold the rag under the end and wipe it clean.
3. Reinsert the dipstick—push it in as far as it will go, or the reading will not be correct.
4. Pull the dipstick out and look at the oil level while holding a rag under the end.

⚠ CAUTION

Be careful not to touch the hot exhaust manifold.

NOTICE

Be careful not to drop engine oil on the vehicle components.

If the oil level is below or only slightly above the low level, add engine oil of the same type as already in the engine.

Remove the oil filler cap and add engine oil in small quantities at a time, checking the dipstick. We recommend that you use a funnel when adding oil.

The approximate quantity of oil needed to raise the level between low and full on the dipstick is indicated as follows:

1.5 L (1.6 qt., 1.3 Imp.qt.)

For the engine oil capacity, see “Service specifications” on page 297.

When the level reaches within the correct range, install the filler cap hand–tight.

NOTICE

- ***Be careful not to spill engine oil on the vehicle components.***
- ***Avoid overfilling, or the hybrid system could be damaged.***
- ***Check the oil level on the dipstick once again after adding the oil.***

Not For Reproduction

ENGINE OIL SELECTION

"Toyota Genuine Motor Oil" is used in your Toyota vehicle. Use Toyota approved "Toyota Genuine Motor Oil" or equivalent to satisfy the following grade and viscosity.

Oil grade:

20W–50 and 15W–40—
API grade SL or SM multigrade engine oil

10W–30 and 5W–30—
API grade SL "Energy–Conserving", SM "Energy–Conserving" or ILSAC multigrade engine oil.

Recommended viscosity (SAE):

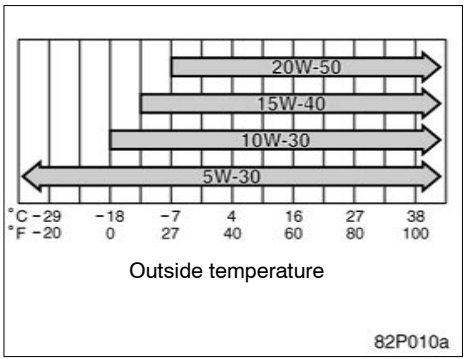

SAE 5W–30 is the best choice for your vehicle, for good fuel economy, and good starting in cold weather.

If you use SAE 10W–30 or a higher viscosity engine oil in extremely low temperatures, the engine may become difficult to start, so SAE 5W–30 engine oil is recommended.

Not For Reproduction

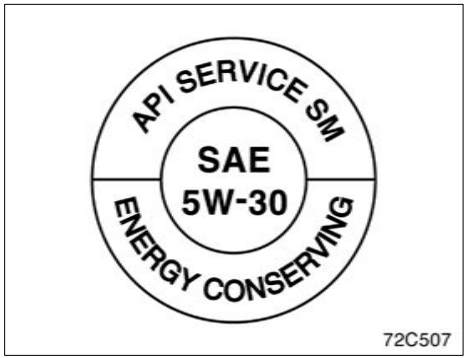

API service symbol

ILSAC certification mark

Oil identification marks

Either or both API registered marks are added to some oil containers to help you select the oil you should use.

The API Service Symbol is located anywhere on the outside of the container.

The top portion of the label shows the oil quality by API (American Petroleum Institute) designations such as SM. The center portion of the label shows the SAE viscosity grade such as SAE 5W–30. “Energy–Conserving” shown in the lower portion, indicates that the oil has fuel–saving capabilities.

The ILSAC (International Lubricant Standardization and Approval Committee) Certification Mark is displayed on the front of the container.

To ensure best possible lubrication performance for your engine, “Toyota Genuine Motor Oil” is available, which has been specifically tested and approved for all Toyota engines.
Please contact your Toyota dealer for further details about “Toyota Genuine Motor Oil”.

Not For Reproduction

Checking the coolant level

Look at the see–through coolant reservoir when the hybrid system is cold. The coolant level is satisfactory if it is between the “FULL” and “LOW” lines on the reservoir. If the level is low, add the coolant. (For the coolant type, see “Coolant type selection” described below.)

The coolant level in the reservoir will vary with hybrid system temperature. However, if the level is on or below the “LOW” line, add coolant. Bring the level up to the “FULL” line.

If the coolant level drops within a short time after replenishing, there may be a leak in the system. Visually check the radiator, hoses, radiator cap and drain cock and water pump.

If you can find no leak, have your Toyota dealer test the cap pressure and check for leaks in the cooling system.

⚠ CAUTION

To prevent burning yourself, do not remove the radiator cap when the engine is hot.

Coolant type selection

Use of improper coolants may damage your cooling system.

Only use “Toyota Super Long Life Coolant” or similar high quality ethylene glycol based non–silicate, non–amine, non–nitrite, and non–borate coolant with long–life hybrid organic acid technology. (Coolant with long–life hybrid organic acid technology is a combination of low phosphates and organic acids.)

“Toyota Super Long Life Coolant” is a mixture of 50% coolant and 50% deionized water. This coolant provides protection down to about –35°C (–31°F).

NOTICE
Do not use plain water alone.

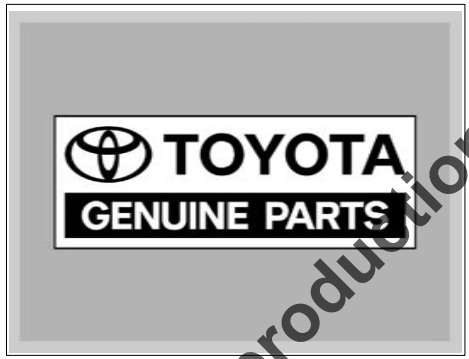

Toyota recommends “Toyota Super Long Life Coolant”, which has been tested to ensure that it will not cause corrosion nor result in malfunction of your coolant system with proper usage. “Toyota Super Long Life Coolant” is formulated with long–life hybrid organic acid technology and has been specifically designed to avoid cooling system malfunction on Toyota vehicles.

Please contact your Toyota dealer for further details.

Not For Reproduction

Checking the radiator and condenser

If either of the above parts is extremely dirty or you are not sure of their condition, take your vehicle to a Toyota dealer.

⚠ CAUTION
To prevent burning yourself, be careful not to touch the radiator or condenser when the engine is hot.

NOTICE
To prevent damage to the radiator and condenser, do not perform the work by yourself.

Checking tire inflation pressure

Keep your tire inflation pressures at the proper level.

The recommended cold tire inflation pressures and tire size are given on page 299.

You should check the tire inflation pressures every two weeks, or at least once a month. And do not forget the spare!

Incorrect tire inflation pressure may waste fuel, reduce the comfort of driving, reduce tire life and make your vehicle less safe to drive.

If a tire frequently needs refilling, have it checked by your Toyota dealer.

The following instructions for checking tire inflation pressure should be observed:

- **The pressure should be checked only when the tires are cold.** If your vehicle has been parked for at least 3 hours and has not been driven for more than 1.5 km or 1 mile since, you will get an accurate cold tire inflation pressure reading.
- **Always use a tire pressure gauge.** The appearance of a tire can be misleading. Besides, tire inflation pressures that are even just a few pounds off can degrade ride and handling.
- **Take special care when adding air to the compact spare tire.** The smaller tire size can gain pressure very quickly. Add compressed air in small quantities and check the pressure often until it reaches the specified pressure.
- **Do not bleed or reduce tire inflation pressure after driving.** It is normal for the tire inflation pressure to be higher after driving.
- **Be sure to reinstall the tire valve caps.** Without the valve caps, dirt or moisture could get into the valve core and cause air leakage. If the caps have been lost, have new ones put on as soon as possible.

Not For Reproduction

⚠ CAUTION

Keep your tires properly inflated. Otherwise, the following conditions may occur and cause an accident resulting in death or serious injuries.

Low tire pressure (underinflation)—

- **Excessive wear**
- **Uneven wear**
- **Poor handling**
- **Possibility of blowouts from an overheated tire**
- **Poor sealing of the tire bead**
- **Wheel deformation and/or tire separation**
- **A greater possibility of tire damage from road hazards**

High tire pressure (overinflation)—

- **Poor handling**
- **Excessive wear**
- **Uneven wear**
- **A greater possibility of tire damage from road hazards**

Checking and replacing tires

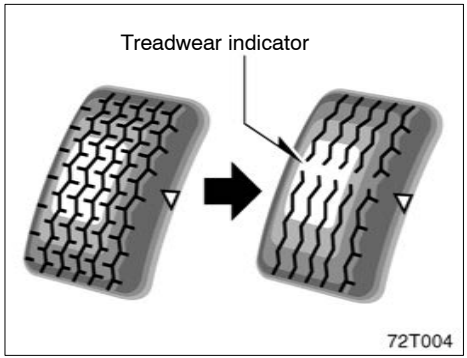

CHECKING YOUR TIRES

Check the tire's tread for treadwear indicators. If the indicators show, replace the tires. The location of treadwear indicators is shown by the "TWI" or "Δ" marks, etc., molded on the side wall of each tire.

The tires on your Toyota have built–in treadwear indicators to help you know when the tires need replacement. When the tread depth wears to 1.6 mm (0.06 in.) or less, the indicators will appear. If you can see the indicators in two or more adjacent grooves, the tire should be replaced. The lower the tread, the higher the risk of skidding.

The effectiveness of snow tires is lost if the tread wears down below 4 mm (0.16 in.).

If you have tire damage such as cuts, splits, cracks deep enough to expose the fabric, or bulges indicating internal damage, the tire should be replaced.

If a tire often goes flat or cannot be properly repaired due to the size or location of a cut or other damage, it should be replaced. If you are not sure, consult with your Toyota dealer.

If air loss occurs while driving, do not continue driving. Driving even a short distance can damage a tire beyond repair.

Any tires which are over 6 years old must be checked by a qualified technician even if damage is not obvious.

Tires deteriorate with age even if they have never or seldom been used.

This applies also to the spare tire and tires stored for future use.

REPLACING YOUR TIRES

When replacing a tire, use only the same size and construction as originally installed and with the same or greater load capacity.

Using any other size or type of tire may seriously affect handling, ride, speedometer/odometer calibration, ground clearance, and clearance between the body and tires or snow chains.

⚠ CAUTION

Observe the following instructions. Otherwise, an accident may occur resulting in death or serious injuries.

- **Do not mix radial, bias belted, or bias–ply tires on your vehicle. It can cause dangerous handling characteristics, resulting in loss of control.**
- **Do not use tires other than the manufacturer's recommended size, as this may cause dangerous handling characteristics resulting in loss of control.**
- **Do not mix tires of different makes, models or tread patterns, and do not mix tires of remarkably different treadwear. This may cause dangerous handling characteristics resulting in loss of control.**

Not For Reproduction

Never use second–hand tires on your Toyota.

Using tires whose previous history is unknown is a risk.

Toyota recommends all four tires, or at least both front or rear tires be replaced at a time as a set.

See “If you have a flat tire” on page 241 for tire change procedure.

When a tire is replaced, the wheel should always be balanced.

An unbalanced wheel may affect vehicle handling and tire life. Wheels can get out of balance with regular use and should therefore be balanced occasionally.

When replacing a tubeless tire, the air valve should also be replaced with a new one.

Rotating tires

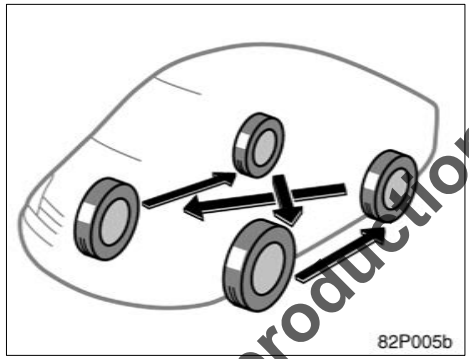

To equalize tire wear and help extend tire life, Toyota recommends that you rotate your tires approximately every 10000 km (6000 miles). However, the most appropriate timing for tire rotation may vary according to your driving habits and road surface conditions.

The wheel assemblies must be rotated as illustration above.

When rotating tires, check for uneven wear and damage. Abnormal wear is usually caused by incorrect tire pressure, improper wheel alignment, out–of–balance wheels, or severe braking.

⚠ CAUTION

Do not include a compact spare tire when rotating the tires. It is designed for temporary use only.

Not for Reproduction

Installing snow tires and chains

WHEN TO USE SNOW TIRES OR CHAINS

Snow tires or chains are recommended when driving on snow or ice.

On wet or dry roads, conventional tires provide better traction than snow tires.

SNOW TIRE SELECTION

If you need snow tires, select tires of the same size, construction and load capacity as the originally installed tires.

Do not use tires other than those mentioned above. Do not install studded tires without first checking local regulations for possible restrictions.

⚠ CAUTION

Do not use snow tires other than the manufacturer's recommended size, as this may cause dangerous handling characteristics resulting in loss of control. Otherwise, an accident may occur resulting in death or serious injuries.

SNOW TIRE INSTALLATION

Snow tires should be installed on all wheels.

Installing snow tires on the front wheels only can lead to an excessive difference in road grip capability between the front and rear tires which could cause loss of vehicle control.

When storing removed tires, you should store them in a cool dry place.

Mark the direction of rotation and be sure to install them in the same direction when replacing.

⚠ CAUTION

- **Do not drive with the snow tires incorrectly inflated.**
- **Observe permissible maximum speed for your snow tires and the legal speed limit.**

TIRE CHAIN SELECTION

Use the tire chains of correct size.

Regulations regarding the use of tire chains vary according to location or type of road, so always check local regulations before installing chains.

NOTICE

If the wrong combination of tire and chain is used, the chains could damage the vehicle body.

CHAIN INSTALLATION

Install the chains on the front tires as tightly as possible. Do not use tire chains on the rear tires. Retighten chains after driving 0.5 – 1.0 km (1/4 – 1/2 mile).

When installing chains on your tires, carefully follow the instructions of the chain manufacturer.

If wheel covers are used, they will be scratched by the chain band, so remove the covers before putting on the chains.

Not For Reproduction

CAUTION

- **Do not exceed 50 km/h (30 mph) or the chain manufacturer's recommended speed limit, whichever is lower.**
- **Drive carefully avoiding bumps, holes, and sharp turns, which may cause the vehicle to bounce.**
- **Avoid sharp turns or locked–wheel braking, as use of chains may adversely affect vehicle handling.**
- **When driving with chains installed, be sure to drive carefully. Slow down before entering curves to avoid losing control of the vehicle. Otherwise an accident may occur.**

NOTICE

Do not attempt to use a tire chain on the compact spare tire, as it may result in damage to the vehicle as well as the tire.

Replacing wheels

WHEN TO REPLACE YOUR WHEELS

If you have wheel damage such as bending, cracks or heavy corrosion, the wheel should be replaced.

If you fail to replace a damaged wheel, the tire may slip off the wheel or cause loss of handling control.

WHEEL SELECTION

When replacing wheels, care should be taken to ensure that the wheels are replaced by ones with the same load capacity, diameter, rim width, and offset.

Correct replacement wheels are available at your Toyota dealer.

A wheel of a different size or type may adversely affect handling, wheel and bearing life, brake cooling, speedometer/odometer calibration, stopping ability, headlight aim, bumper height, vehicle ground clearance, and tire or snow chain clearance to the body and chassis.

Replacement with used wheels is not recommended as they may have been subjected to rough treatment or high mileage and could fail without warning. Also, bent wheels which have been straightened may have structural damage and therefore should not be used. Never use an inner tube in a leaking wheel which is designed for a tubeless tire.

Not For Reproduction

Aluminum wheel precautions

- When installing aluminum wheels, check that the wheel nuts are tight after driving your vehicle the first 1600 km (1000 miles).
- If you have rotated, repaired, or changed your tires, check that the wheel nuts are still tight after driving 1600 km (1000 miles).
- When using tire chains, be careful not to damage the aluminum wheels.
- Use only Toyota wheel nuts and wrench designed for your aluminum wheels.
- When balancing your wheels, use only Toyota balance weights or equivalent and a plastic or rubber hammer.
- As with any wheel, periodically check your aluminum wheels for damage. If damaged, replace immediately.

Not For Reproduction

Not For Reproduction

DO–IT–YOURSELF MAINTENANCE

Electrical components

Checking 12 volt battery condition 284
12 volt battery recharging precautions 286
Checking and replacing fuses 286
Adding washer fluid 287
Replacing light bulbs 288

Not For Reproduction

Checking 12 volt battery condition—
—Precautions

⚠ CAUTION

12 VOLT BATTERY PRECAUTIONS

When the 12 volt battery must be replaced, use the Prius designated battery.

The 12 volt battery produces flammable and explosive hydrogen gas.

- **Do not cause a spark from the battery with tools.**
- **Do not smoke or light a match near the battery.**

The electrolyte contains poisonous and corrosive sulfuric acid.

- **Avoid contact with eyes, skin or clothes.**
- **Never ingest electrolyte.**
- **Wear protective safety glasses when working near the battery.**
- **Keep children away from the battery.**

EMERGENCY MEASURES

- **If electrolyte gets in your eyes, flush your eyes with clean water and get immediate medical attention. If possible, continue to apply water with a sponge or cloth while en route to the medical office.**
- **If electrolyte gets on your skin, thoroughly wash the contact area. If you feel pain or burn, get medical attention immediately.**
- **If electrolyte gets on your clothes, there is a possibility of its soaking through to your skin, so immediately take off the exposed clothing and follow the procedure above, if necessary.**
- **If you accidentally swallow electrolyte, drink a large quantity of water or milk. Follow with milk of magnesia, beaten raw egg or vegetable oil. Then go immediately for emergency help.**

Not For Reproduction

—Checking 12 volt battery exterior

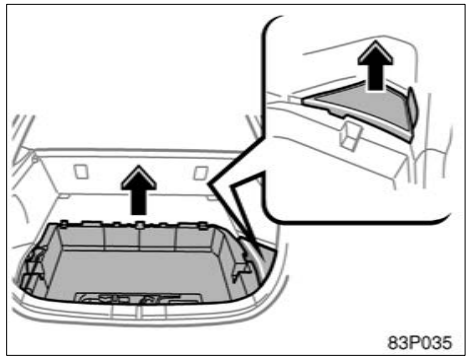

Open the back door. Remove the luggage storage box and 12 volt battery cover.

If the back door does not open, see “If you cannot operate back door opener” on page 252.

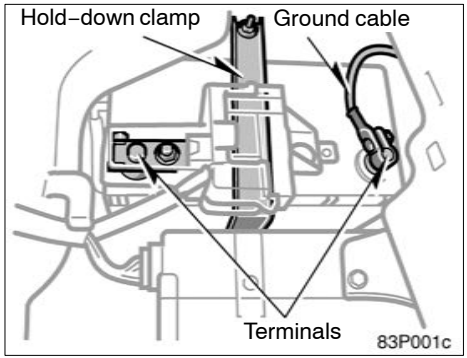

Check the battery for corroded or loose terminal connections, cracks, or loose hold–down clamp.

a. If the battery is corroded, wash it off with a solution of warm water and baking soda. Coat the outside of the terminals with grease to prevent further corrosion.

b. If the terminal connections are loose, tighten their clamp nuts—but do not overtighten.

c. Tighten the hold–down clamp only enough to keep the battery firmly in place. Overtightening may damage the battery case.

NOTICE

- ***Be sure the hybrid system and all accessories are off before performing maintenance.***
- ***When checking the battery, remove the ground cable from the negative terminal ("–" mark) first and reinstall it last.***
- ***Be careful not to cause a short circuit with tools.***
- ***Take care no solution gets into the battery when washing it.***

If the 12 volt battery is disconnected or run down, the power window and back door may not operate automatically and the jam protection function will not function correctly and does not open the back door after you reconnect, replace or recharge the battery. In any of these cases, you should normalize each system. To normalize them, see "Power windows" on page 38 and "Back door" on page 37.

Before you disconnect the 12 volt battery, confirm the shift position is "P" and apply the parking brake completely.

After you reconnect the 12 volt battery, shift the shift lever to "N" and confirm the shift position is "N" when the "IG–ON" mode is enabled.

After connecting the cables, the hybrid system may not start by pushing the "POWER" switch. In that case, push it once again.

Not For Reproduction

12 volt battery recharging precautions

During recharging, the battery is producing hydrogen gas.

Therefore, before recharging:

1. If recharging with the battery installed on the vehicle, be sure to disconnect the ground cable.
2. Make sure the power switch on the recharger is off when connecting the charger cables to the battery and when disconnecting them.

⚠ CAUTION

- **Always charge the battery in an unconfined area. Do not charge the battery in a garage or closed room where there is not sufficient ventilation.**
- **Only do a slow charge (3.5 A or less). Charging at a quicker rate is dangerous. The battery may explode, causing personal injuries.**

NOTICE

Never recharge the battery with the hybrid system on. Also, be sure all accessories are turned off.

Checking and replacing fuses

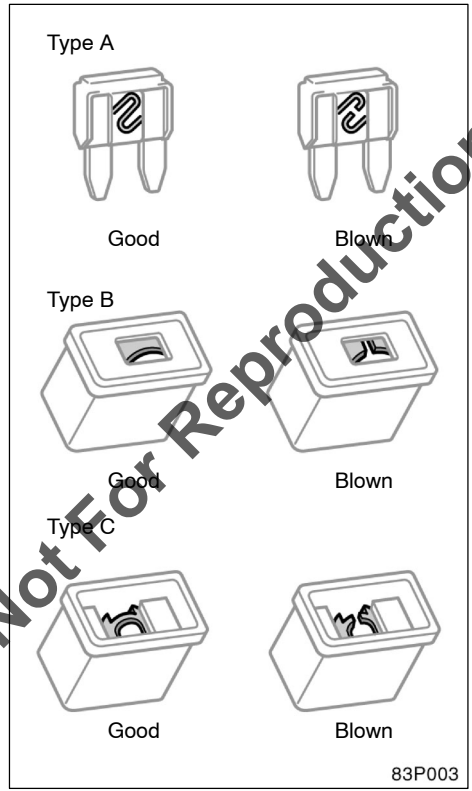

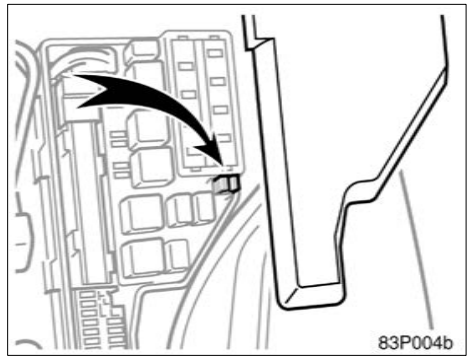

If the headlights or other electrical components do not work, check the fuses. If any of the fuses are blown, they must be replaced.

See “Fuse locations” on page 267 for locations of the fuses.

Turn the hybrid system and inoperative component off. Pull the suspected fuse straight out and check it.

Determine which fuse may be causing the problem. The lid of the fuse box shows the name of the circuit for each fuse. See page 300 for the functions controlled by each circuit.

Not For Reproduction

Type A fuses can be pulled out by the pull–out tool. The location of the pull–out tool is shown in the illustration.

If you are not sure whether the fuse has blown, try replacing the suspected fuse with one that you know is good.

If the fuse has blown, push a new fuse into the clip.

Only install a fuse with the amperage rating designated on the fuse box lid.

If you do not have a spare fuse, in an emergency you can pull out the “DOME” or “OBDII” fuse, which may be dispensable for normal driving, and use it if its amperage rating is the same.

If you cannot use one of the same amperage, use one that is lower, but as close to the rating as possible. If the amperage is lower than that specified, the fuse might blow out again. but this does not indicate anything wrong. Be sure to get the correct fuse as soon as possible and return the substitute to its original clip.

It is a good idea to purchase a set of spare fuses and keep them in your vehicle for emergencies.

If the new fuse immediately blows out, there is a problem with the electrical system. Have your Toyota dealer correct it as soon as possible.

⚠ CAUTION

Never use a fuse with a higher amperage rating, or any other object, in place of a fuse. This may cause extensive damage and possibly a fire.

Not For Reproduction

Adding washer fluid

If any washer does not work, the washer tank may be empty. Add washer fluid.

You may use plain water as washer fluid. However, in cold areas where temperatures range below the freezing point, use washer fluid containing antifreeze. This product is available at your Toyota dealer and most auto parts stores. Follow the manufacturer’s directions for how much to mix with water.

NOTICE

Do not use engine antifreeze or any other substitute because it may damage your vehicle’s paint.

Replacing light bulbs—

The following illustrations show how to gain access to the bulbs. When replacing a bulb, make sure the hybrid system and light switch are off. Use bulbs with the wattage ratings given in the table.

The stop lights and high mounted stoplight consist of a number of LEDs. If any of the LEDs burn out, take your vehicle to your Toyota dealer to have the light replaced.

CAUTION

- **To prevent burning yourself, do not replace the light bulbs while they are hot.**
- **Halogen bulbs have pressurized gas inside and require special handling. They can burst or shatter if scratched or dropped. Hold a bulb only by its plastic or metal case. Do not touch the glass part of a bulb with bare hands.**

NOTICE

Only use a bulb of the listed type.

The inside of the lens of exterior lights such as headlights may temporarily fog up when the lense becomes wet in the rain or in a car wash. This is not a problem because the fogging is caused by the temperature difference between the outside and inside of the lense, just like the windshield fogs up in the rain. However, if there is a large drop of water on the inside of the lense, or if there is water pooled inside the light, contact your Toyota dealer.

Not For Reproduction

Light bulbs	W	Type
Headlights	60/55	A
Front fog lights	51	B
Parking lights	5	C
Front turn signal lights	21	B
Side turn signal lights	5	C
Rear turn signal lights	21	C
Tail lights	5	C
Stop lights	4.4	E
High mounted stoplight	2.8	E
Back–up lights	21	C
License plate lights	5	C
Interior lights	8	D
Personal lights	8	B
Door courtesy lights	5	C
Vanity lights	5	D
Luggage compartment light	5	D

A: H4 Halogen bulbs

B: HB4 Halogen bulbs

C: Wedge base bulbs

D: Double end bulbs

E: LEDs (Light–emitting Diodes)

—Headlights

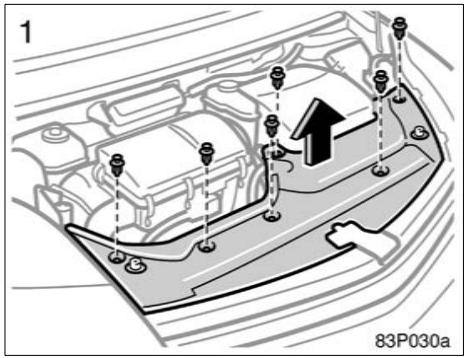

1. Open the hood. Remove the clips and take out the cover.

Remove and install the clips as shown in the following illustrations.

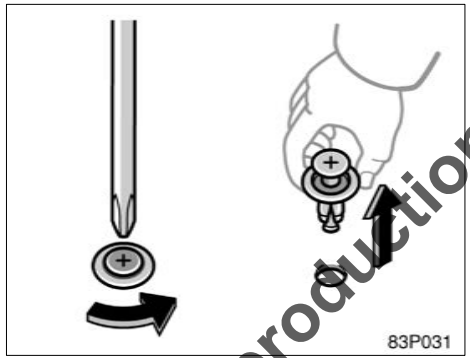

Removing clip

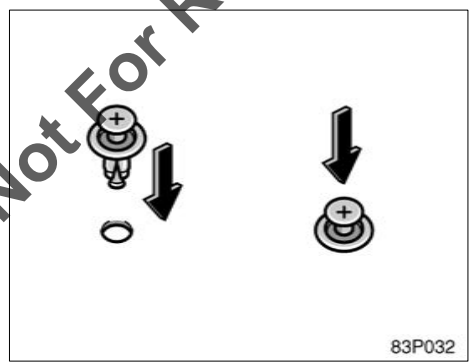

Installing clip

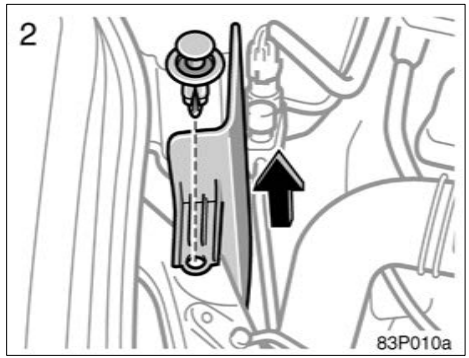

2. RIGHT–HAND HEADLIGHT ONLY: Remove the clip and take out the air cleaner inlet.

Remove and install the clip as shown in the following illustrations.

Not For Reproduction

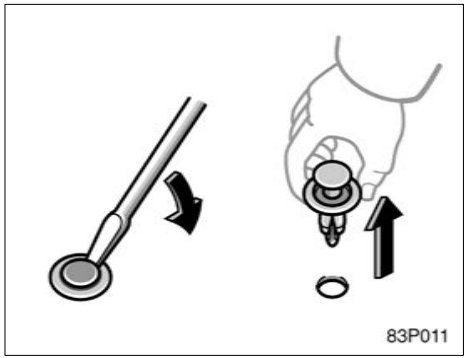

Removing clip

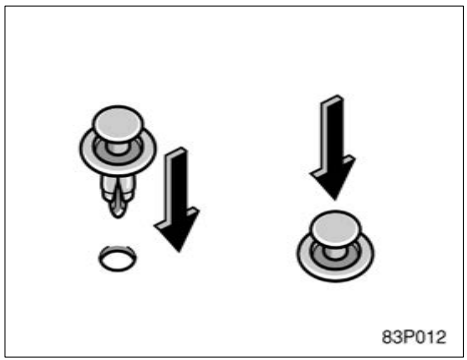

Installing clip

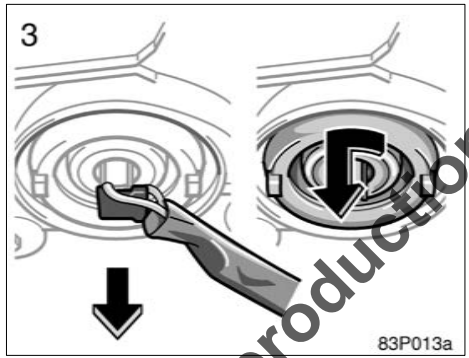

3. Unplug the connector. Turn the bulb cover counter-clockwise and remove it.

If the connector is tight, wiggle it.

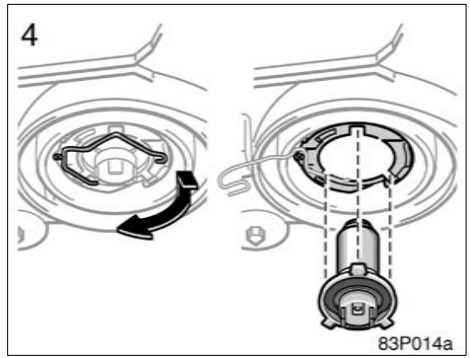

4. Release the bulb retaining spring and remove the bulb along with the socket. Install a new bulb into the socket and return the bulb retaining spring to its original position.

To install a bulb, align the tabs of the bulb with the cutout of the mounting hole.

Not For Reproduction

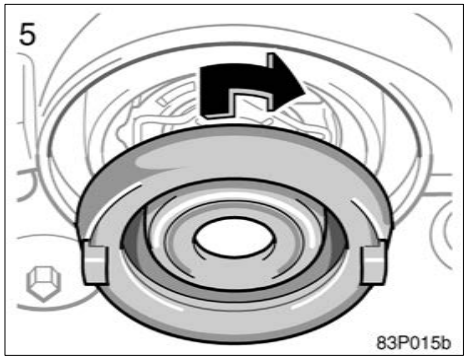

5. Install the bulb cover and turn it clockwise. Plug in the connector.

Aiming is not necessary after replacing the bulb. When aiming adjustment is necessary, contact your Toyota dealer.

—Front fog lights

If either the left or right front fog lights burns out, contact your Toyota dealer.

NOTICE
Do not try to replace the front fog light bulbs by yourself. You may damage the vehicle.

—Parking lights

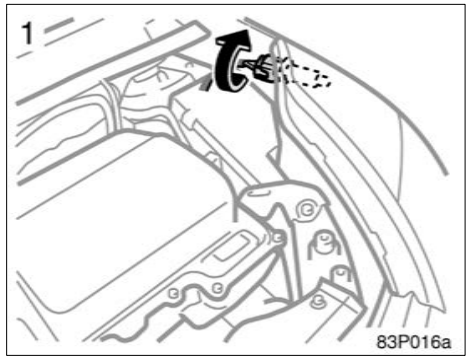

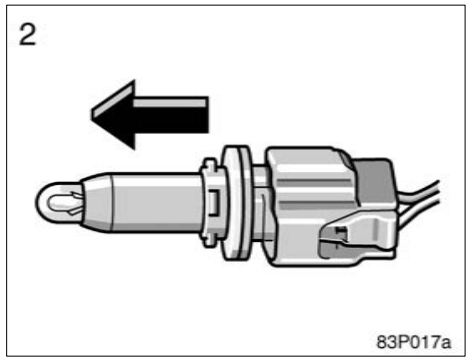

Not For Reproduction

—Front turn signal lights

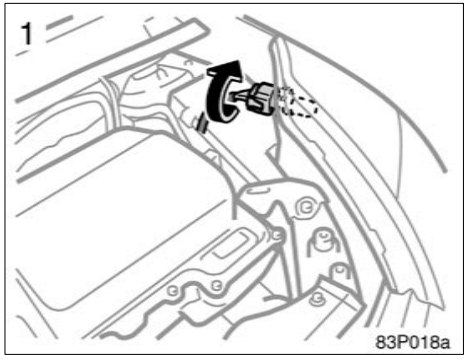

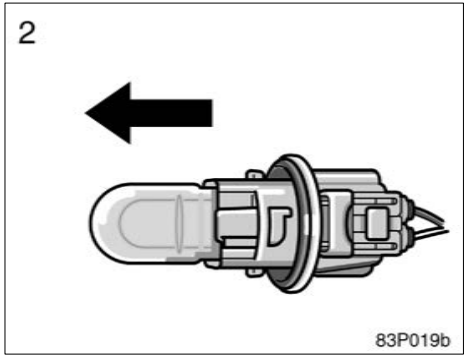

—Side turn signal lights

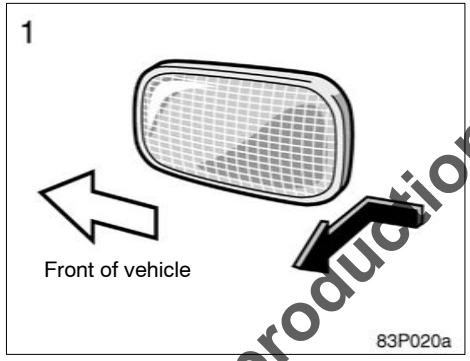

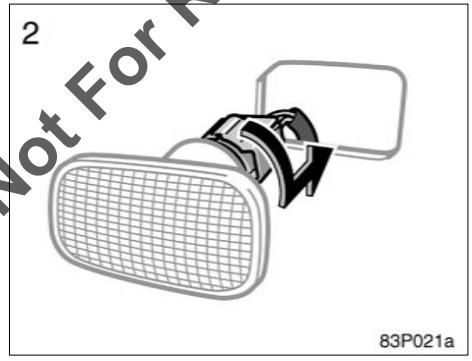

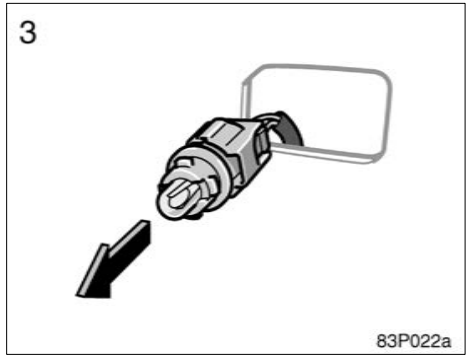

Not For Reproduction

—Rear turn signal, tail and back-up lights

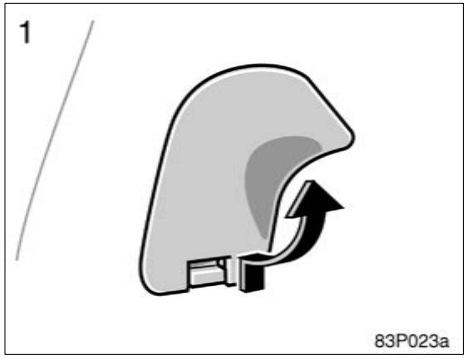

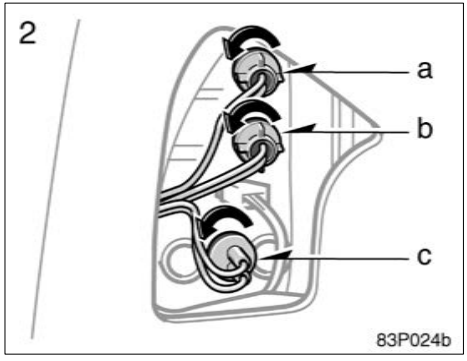

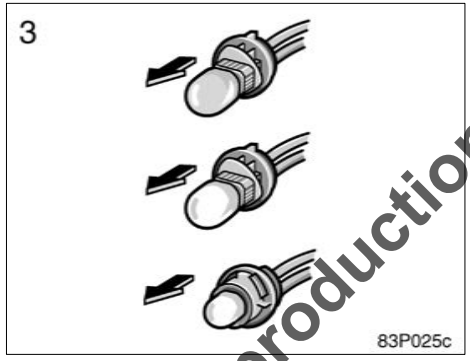

a: Rear turn signal light
b: Back-up light
c: Tail light

—License plate lights

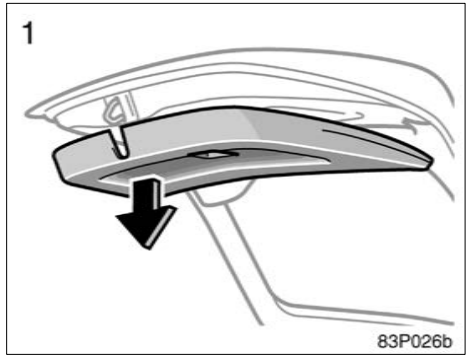

Remove the cover.

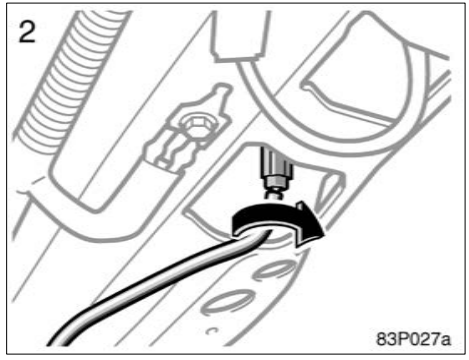

Not For Reproduction

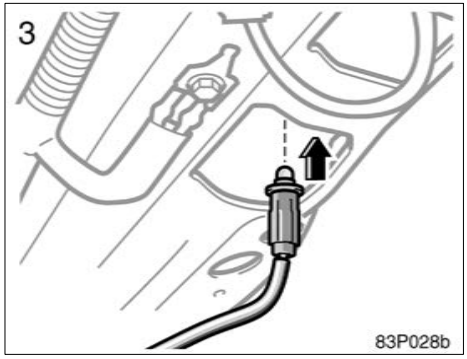

Not For Reproduction

SECTION 9

SPECIFICATIONS

Dimensions 296
Electric motor 296
Engine 296
Fuel 297
Hybrid vehicle assembly 297
Service specifications 297
Tires 299
Fuses 300

Not For Reproduction

Dimensions

Overall length	mm (in.)	4445	(175.0)
Overall width	mm (in.)	1725	(67.9)
Overall height	mm (in.)	1490	(58.7)
Wheelbase	mm (in.)	2700	(106.3)
Front tread	mm (in.)	1510	(59.4)
Rear tread	mm (in.)	1480	(58.3)

Electric motor

Type: Permanent magnet synchronous motor (water cooling)

Maximum output:
50 kW

Maximum torque:
400 N·m (40.8 kgf·m, 259 ft·lbf)

Engine

Model: 1NZ–FXE

Type: 4–cylinder in line, 4 cycle, gasoline

Bore and stroke, mm (in.):
75.0 x 84.7 (2.95 x 3.33)

Displacement, cm^3 (cu. in.):
1497 (91.4)

Not For Reproduction

Fuel

Fuel type:
Unleaded gasoline, Research Octane Number 91 or higher. For improved vehicle performance, the use of premium unleaded gasoline with a Research Octane Number of 95 or higher is recommended.

Fuel tank capacity, L (gal., Imp.gal.):
45 (11.9 , 9.9)

Hybrid battery

Type: Nickel–Metal hydride battery

Voltage: 7.2 V

Capacity: 6.5 Ah (3HR)

Quantity: 28

Overall voltage: 201.6 V

Service specifications

ENGINE

Valve clearance (engine cold), mm (in.):

Intake	0.17 – 0.23 (0.007 – 0.009)
Exhaust	0.27 – 0.33 (0.011 – 0.013)

Spark plug type:

DENSO	SK16R11
NGK	IFR5A11

Spark plug gap, mm (in.):
1.1 (0.043)

Not For Reproduction

ENGINE LUBRICATION

Oil capacity (drain and refill), L (qt, Imp.qt.):

With filter	3.7 (3.9, 3.3)
Without filter	3.4 (3.6, 3.0)

"Toyota Genuine Motor Oil" is used in your Toyota vehicle. Use Toyota approved "Toyota Genuine Motor Oil" or equivalent to satisfy the following grade and viscosity.

Oil grade:

20W–50 and 15W–40—
API grade SL or SM multigrade engine oil

10W–30 and 5W–30—
API grade SL "Energy–Conserving", SM "Energy–Conserving" or ILSAC multigrade engine oil.

Please contact your Toyota dealer for further details.

Recommended oil viscosity (SAE):

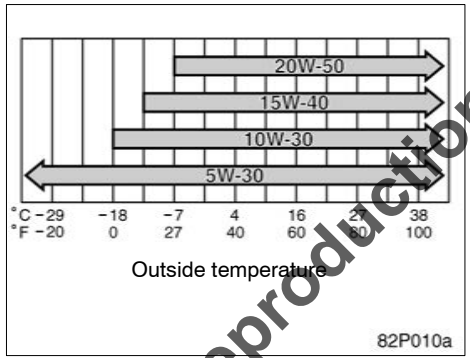

COOLING SYSTEM

Total capacity, L (qt., Imp.qt.):

For gasoline engine	5.3 (5.6, 4.7)
For electric motor and inverter and converter	2.7 (2.9, 2.4)

Coolant type:

"Toyota Super Long Life Coolant" is used in your Toyota vehicle at factory fill. In order to avoid technical problems, only use "Toyota Super Long Life Coolant" or similar high quality ethylene glycol based non–silicate, non–amine, non–nitrite, and non–borate coolant with long–life hybrid organic acid technology. (Coolant with long–life hybrid organic acid technology is a combination of low phosphates and organic acids.)

Do not use plain water alone.

Please contact your Toyota dealer for further details.

Not For Reproduction

12 VOLT BATTERY

Open voltage at 20°C (68°F):

12.6 – 12.8 V	Fully charged
12.2 – 12.4 V	Half charged
11.5 – 11.9 V	Discharged

[Voltage that is checked 20 minutes after the key is removed with all the lights turned off]

Charging rates: 3.5 A max.

HYBRID TRANSAXLE

Fluid capacity (drain and refill), L (qt., Imp.qt.):
3.6 (3.8, 3.2)

Fluid type:
"Toyota Genuine ATF WS" or equivalent

Please contact your Toyota dealer for further details.

BRAKES

Minimum pedal clearance when depressed with the force of 196 N (20 kgf, 44 lbf) with the traction motor running, mm (in.):
103.7 (4.08)

Pedal free play, mm (in.):
1 – 6 (0.04 – 0.24)

Parking brake adjustment when depressed with the force of 294 N (30 kgf, 66 lbf):
6 – 9 clicks

Fluid type:
SAE J1703 or FMVSS No. 116 DOT 3

STEERING

Wheel free play:
Less than 30 mm (1.2 in.)

Not For Reproduction

Tires

Tire size

Standard tire
195/60R15 88V

Tire inflation pressure, kPa (kgf/cm^2 or bar, psi)

For driving over 140 km/h (87 mph)

Front	270 (2.7, 39)
Rear	260 (2.6, 38)

For driving 140 km/h (87 mph) or under

Front	240 (2.4, 35)
Rear	230 (2.3, 33)

Spare tire:

Compact spare tire
T125/70D16 96M

Tire inflation pressure, kPa (kgf/cm^2 or bar, psi)
420 (4.2, 60)

Wheel size:

Standard tire	15 x 6JJ
Compact spare tire	16 x 4T

Wheel nut torque, N·m (kgf·m, ft·lbf):
103 (10.5, 76)

NOTE: For complete information on tires (e.g. replacing tires or replacing wheels), see "Checking tire inflation pressure" through "Aluminum wheel precautions", page 276 through 281.

Fuses

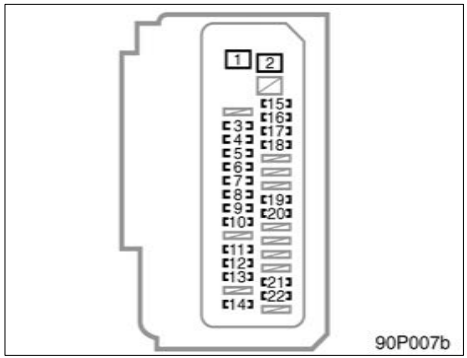

Instrument panel

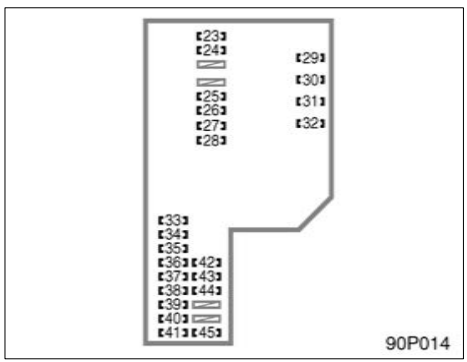

Engine compartment

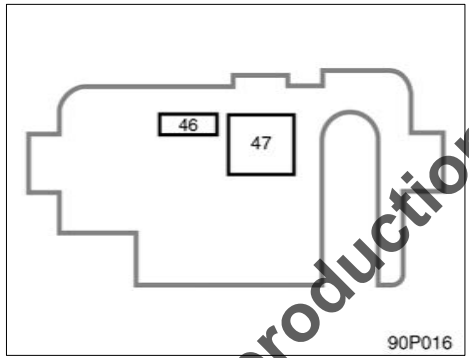

Luggage compartment

Not For Reproduction

1. **PWR 30 A:** Power windows
2. **DEF 40 A:** Rear window defogger
3. **M/HTR 15 A:** Outside rear view mirror heater
4. **WIP 30 A:** Windshield wiper
5. **RR WIP 15 A:** Rear wiper
6. **WSH 20 A:** Washer
7. **ECU–IG 7.5 A:** Smart entry and start system, power windows, multi–information display, electric power steering
8. **GAUGE 10 A:** Gauge and meter, back–up lights, emergency flasher, power windows
9. **OBD 7.5 A:** On–board diagnosis system
10. **STOP 7.5 A:** Stop lights
11. **DOOR 25 A:** Power door lock system
12. **ACC–B 25 A:** “POWER OUTLET”, “ACC” fuses
13. **ECU–B 15 A:** Multi–information display, power windows, air conditioning system
14. **AM1 7.5 A:** Hybrid system
15. **TAIL 10 A:** Tail lights, license plates light, parking lights
16. **PANEL 7.5 A:** Multi–information display, clock, audio system, instrument panel lights
17. **A/C (HTR) 10 A:** Air conditioning system
18. **FR DOOR 20 A:** Power windows
19. **PWR OUTLET 15 A:** Power outlet
20. **ACC 7.5 A:** Audio system, multi–information display, clock
21. **PWR OUTLET FR 15 A:** Power outlet
22. **IGN 7.5 A:** Hybrid system, SRS air-bags

23. **SPARE 30 A:** Spare
24. **SPARE 15 A:** Spare
25. **H–LP LO RH 10 A:** Right–hand headlight (low beam)
26. **H–LP LO LH 10 A:** Left–hand headlight (low beam)
27. **H–LP HI RH 10 A:** Right–hand headlight (high beam)
28. **H–LP HI LH 10 A:** Left–hand headlight (high beam)
29. **EFI 15 A:** Multiport fuel injection system/sequential multiport fuel injection system
30. **AM2 15 A:** “IGN” fuse, ignition system
31. **HORN 10 A:** Horn
32. **HEV 20 A:** Hybrid system
33. **P CON MAIN 7.5 A:** Parking control system
34. **ABS–1 25 A:** Anti–lock brake system
35. **ETCS 10 A:** Electronic throttle control system
36. **BATT FAN 10 A:** Battery cooling fan
37. **HAZ 10 A:** Turn signal lights, emergency flasher
38. **DOME 15 A:** Audio system, interior lights, smart entry and start system, gauge and meter, turn signal lights, luggage room light, clock
39. **ABS MAIN3 15 A:** Anti–lock brake system
40. **ABS MAIN2 10 A:** Anti–lock brake system
41. **ABS MAIN1 10 A:** Anti–lock brake system
42. **FR FOG 15 A:** Fog lights
43. **RR FOG LP 10 A:** No circuit
44. **AMP 30 A:** Audio system
45. **CDS FAN 30 A:** Electric cooling fan
46. **DC/DC–S 5 A:** Inverter and converter
47. **MAIN 120 A:** Hybrid system

Not For Reproduction

Not For Reproduction

SECTION 10

INDEX

Not For Reproduction

A

Adding washer fluid 287
Adjustment
Front seat 48
Seat belt 54
Air conditioning filter 195
Air conditioning system 184
Airbags 59
Aluminum wheel precautions 281
Anti–glare inside rear view mirror 92
Anti–lock brake system
warning light 107
Anti–theft steering column lock 120
Appearance care
Cleaning the interior 257
Protecting your Toyota
from corrosion 254
Washing and waxing 255
Armrest 52
Audio system 150
AUX adapter 204
Auxiliary box 205
Auxiliary catch, Engine hood 40

B

Back door 37
Battery
Checking 12 volt battery condition . . . 284
Gas caution 284
Handling safety 284
Hybrid battery assembly 297
Recharging precautions 286
Winter driving tips 232
Before starting the hybrid system 226
Bottle holder 207
Brake pad wear limit indicators 221
Brake system 217
Brake system warning light 107, 109
Brakes
Pad wear indicators 221
Parking 132
Break–in tips 212

C

Carbon monoxide caution 214
Charging system warning light . . . 107, 116
Checking and replacing fuses 286
Checking the engine oil level 272
Checking the radiator
and condenser 275
Child restraint
Child restraint system 74
Installation 76, 84
Precautions 73
Type of child restraint system 75
Child restraint anchor fittings 86
Cleaning the interior 257
Clock 200
Cold weather, Operation 232
Condenser,
Checking the condenser 275
Controls, Instrument panel 2, 4
Cooling system
Coolant level 274
Overheating 240
Radiator and reservoir 274
Winter driving tips 232
Corrosion prevention 254
Cruise control 132
Cup holder 206

D

Defogger, Rear window 101
Dimmer switch, Headlight 96
Directional signals 96
Do–it–yourself maintenance,
Service precautions 268
Does your vehicle need repairing? 263

Not For Reproduction

Driving
Driving tips 226
Hybrid transaxle 126
Driving in the rain 231
Driving tips
Driving tips in various conditions 230
Driving with a hybrid transaxle 126
Economical driving 233
Pre–trip safety check 228
Winter driving tips 232
During, Break–in 212

E

Economical driving, Saving money on both fuel and repairs 233
Electric power steering system 221
Electrical system
Battery 284
Fuse locations 267
Fuses 286
Emergency flasher switch 97
Emergency, In case of
Blown fuse 286
Emergency flasher switch 97
Flat tire 241
If you cannot operate back door opener 252
If you lose your keys 251
If your hybrid system stalls while driving 240
If your vehicle needs to be towed 248
If your vehicle will not start 236
Jump starting 236
Overheating 240
Towing 248
Energy monitor 142
Engine
Checking the coolant level 274
Emission control device 213
Engine compartment 266
Exhaust gas caution 214
Hood release 40
Oil consumption 215
Oil level 272
Overheating 240
Radiator cap 240
Starting procedure 226
Three–way catalytic converters 213
Engine coolant, Winter driving tips 232
Engine oil, Winter driving tips 232
EV drive mode switch 8
Exhaust gas caution 214

F

Facts about engine oil consumption . . . 215
Flasher, Headlight 96
Flat tire
After changing wheels 248
Changing tire 246
If you have a flat tire 241
Jack point 245
Jacking precautions 241
Jacking up 245
Loosening wheel nuts 244
Lowering vehicle 247
Wheel block 244
Wheel nuts 247
Floor mat 210
Fluid level, Washer fluid 287
Fold–down rear seat 50
Foreign countries, Operation in 213
Front seat 48
Front seats 46
Fuel
Filler door opener 42
Fuel economy 233
Gauge 104
Operation in foreign countries 213
Tank cap 42
Fuel consumption 142
Fuel information 212
Fuel pump shut–off system 213
Fuse, Fuse box 286

Not For Reproduction

Fuse locations 267

G

Gauge, Fuel 104
Glove box 205

H

Hazard switch 97
Head restraints 51
Headlight switch 96
High coolant temperature
warning light 116
High speed operation,
During break–in 212
Hood release, Engine 40
How to start the hybrid system 226
Hybrid battery warning light 117
Hybrid system
For efficient use of your vehicle 12
Operating condition 9
Precautions for use 13
Starting 12
Toyota hybrid system 8
Hybrid transaxle
Driving with a hybrid transaxle 126
Shift pattern 126
Hybrid vehicle immobiliser system 20

I

Identification
Engine and motor 223
Vehicle 222
Indicator symbols 5
Instrument cluster and multi–information
display overview 4
Instrument panel
Fuel gauge 104
Indicator symbols 5
Odometer 105
Trip meter 105
Instrument panel light control button . . 106
Instrument panel overview 2
Interior light 98

J

Jack
Jack point 245, 270
Location 243
Jump starting 236

K

Key reminder buzzer 107
Key slot 120
Keys 18, 251

L

Light bulbs
Back–up lights 293
Front turn signal lights 292
Headlights 289
License plate lights 293
Parking lights 291
Rear turn signal lights 293
Side turn signal lights 292
Stop and tail lights 293
Light bulbs, Replacing 288
Light reminder buzzer 107
Light, interior
Interior light 98
Key slot light 100
Personal light 99
Lock
Driver’s door 35
Steering column 120
Low engine oil pressure
warning light 116
Low fuel level warning light 107, 112
Low oil pressure warning light 107
Luggage compartment light 99
Luggage cover 209
Luggage storage box 208
Luggage stowage precautions 222

Not For Reproduction

M

Maintenance 262, 263
Do–it–yourself maintenance 268
Does your vehicle need repairing? . . . 263
Maintenance requirements 262
Where to go for service 262
Malfunction indicator lamp 107, 111
Mirror
Anti–glare inside rear view 92
Vanity mirror 93
Mirrors
Folding rear view 92
Outside rear view 90
Power rear view 91
Multi–display
Adjustment 145
Before operation 138
Functions 139
Information 141
Switch operation 138
Multi–information display,
Screen transition 143

N

New vehicle break–in 212

O

Odometer 105
Oil
Consumption 215
Viscosity and grade 272
Oil consumption 215
Open door warning light 107, 112
Operating in foreign countries 213
Operating tips,
air conditioning system 193
Overheating, Hybrid system 240

P

Parking brake
Operation 132
Reminder light 132
Personal light 99
Polishing 255
Power outlet 203
Power rear view mirror control 91
"POWER" switch 121
Power window switches 38
Pre–trip safety check 228
Preloaders (seat belt pretensioners) . . . 57
Pretensioners
(seat belt pretensioners) 57
Protecting your Toyota
from corrosion 254
Push button start system 120

R

Radiator
Checking the radiator 275
Coolant, Engine 274
Radio 150
Rear console box 204
Rear seat, Fold–down 50
Rear view mirror, Anti–glare inside 92
Rear view mirror, Folding 92
Rear view mirrors, Outside 90
Rear view mirrors, Power 91
Rear view monitor system 200
Rear window defogger switch 101

S

Safety check, Pre–trip 228
Seat adjustment precautions
Front seat 48
Front seats 47
Seat belt reminder buzzer 107
Seat belts 86
Child restraint anchor fittings 86
Cleaning 257
Fastening 52
Seat belt precautions 52
Seat belt pretensioners 57
Seats 46
Service and maintenance 262
Side door locks 35

Not For Reproduction

Spare fuse 286
Spare tire 243
Spark plugs,
Iridium–tipped spark plugs 216
Specifications 296
SRS driver and front passenger
airbags 59
SRS side airbags 65
SRS warning light 107, 112
Starting
Cold weather 226
Hybrid system 226
Jump starting 236
Steering, Tilt steering wheel 90
Steering column, Column lock 120
Steering switches 174
Suspension and chassis 223
Switch
Emergency flashers 97
Headlight, dimmer and turn signal 96
Rear window defogger 101
Windshield wiper and washer 100

T

Three–way catalytic converters 213
Tie–down hooks 208
Tilt steering wheel 90
Tires
Changing 241
Flat tire 241
Rotation 278
Spare 243
Tire
information 276, 277, 278, 279, 280
Tools 243
Towing
Emergency towing 249
If your vehicle needs to be towed 248
Trailer 233
Trailer towing 233
Trip information 142
Trip meter 105
Turn signals 96

V

Vanity mirror 93
Vehicle identification number (VIN) . . . 222

W

Warning buzzer 107
Washer fluid, Adding washer fluid 287
Washing and waxing 255
Wheels, Aluminum wheel 281
Windshield wiper and washer
switch 100
Winter driving tips 232
Wireless remote control 32

Not For Reproduction

Quick index

- If a service reminder indicator or warning buzzer comes on .. 107
- If your vehicle will not start 236
- If your vehicle overheats 240
- If you have a flat tire 241
- If your vehicle needs to be towed 248
- Tips for driving during break-in period 212
- How to start the hybrid system 226
- Pre−trip safety check 228
- Complete index 303

Gas station information

Fuel type:

UNLEADED gasoline, Research Octane Number 91 or higher. For improved vehicle performance, the use of premium unleaded gasoline with a Research Octane Number of 95 or higher is recommended.

See page 212 for detailed information.

Fuel tank capacity:

45 L (11.9 gal., 9.9 Imp.gal.)

See page 212 for detailed information.

Engine oil:

20W−50 and 15W−40—API grade SL or SM multigrade engine oil

10W−30 and 5W−30—API grade SL “Energy−Conserving”, SM “Energy−Conserving” or ILSAC multigrade engine oil

See page 273 for detailed information.

Tire information: See pages 276 through 281.

Tire inflation pressure: See page 299.

Not For Reproduction

Publication No. OM47574E
Part No. 01999-47574
Printed in Japan 07−0808−06C
プリウス(豪州E)